Operator's manual
FeedBelt - AUTO

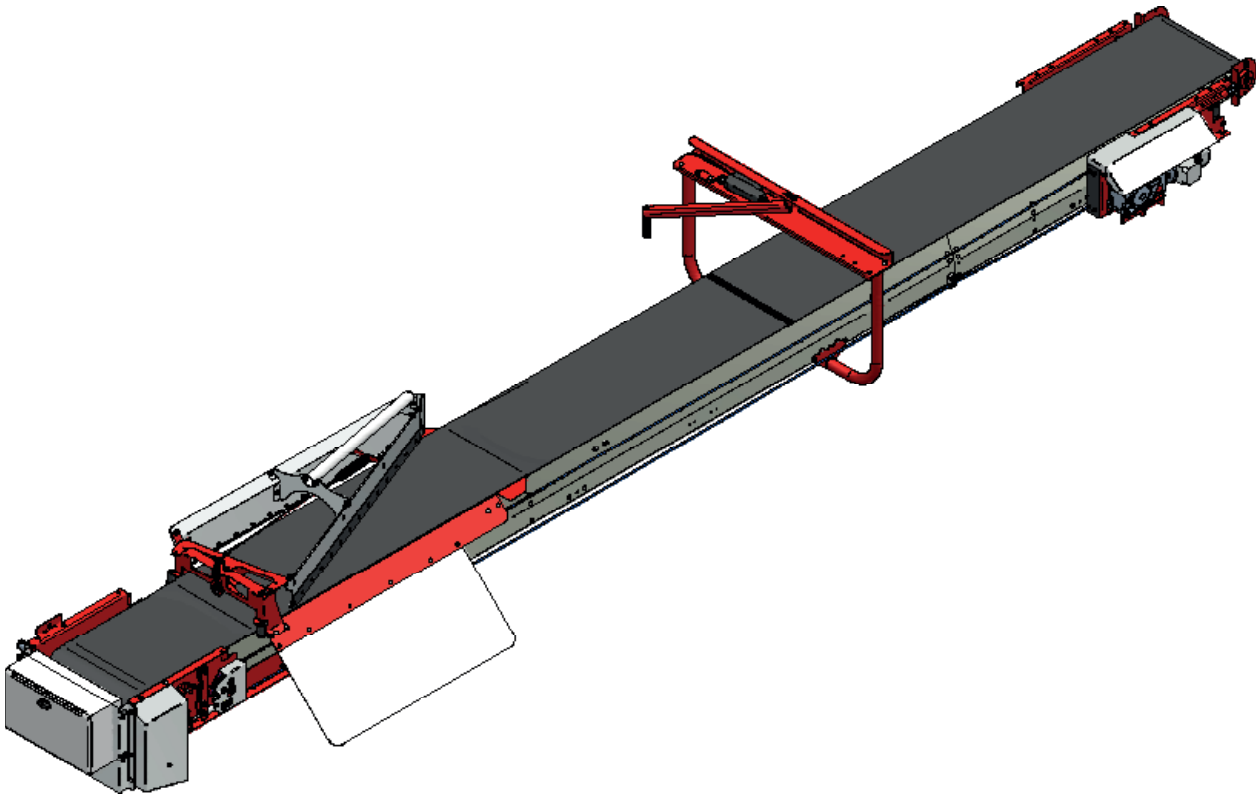

Content

1 General safety instruction
1.1 CE – Declaration of conformity

We,
TKS Agri AS,
Kvernelandsvegen 100
N-4355 Kverneland
Norge
declare that the product:

TKS - FeedBelt

has been built in conformity with the Machine Directive and meets the relevant fundamental health and safety requirements

Kverneland, 16 October 2019

Atle Sjølyst - Kverneland

Atle Sjølyst - Kverneland
General Manager

Enter the serial number on the machine:

_____

TKS Agri AS, manufacturer of agricultural products, reserves the right to change the design and/ or specifications of its products without prior warning.
This does not imply any obligation to modify previously supplied machines.

1.2 Guarantee

This TKS product is guaranteed against manufacturing and material defects for one year.

If the owner wishes a defect to be covered by the product guarantee, he or his representative must inform the dealer of this when ordering parts and/or repairs. Claims must be reported within the guarantee period.
The dealer must complete a claims form for each case covered by a guarantee and send it to TKS or TKS's distributor/importer within the 10th of the month following the one in which the defect was reported. The defective parts shall be marked with the claim number and be kept for up to 6 months so that TKS or TKS's distributor/importer can inspect them.
Since TKS products are used outside the manufacturer's control, we can only guarantee the product quality, and not that it will perform its function, nor are we liable for any resulting damage.

The guarantee is not valid if:

a) third party spare parts are used, or the product is repaired or altered without the approval of TKS.
b) the operating and servicing instructions have not been followed.
c) the machine has been used for other purposes than those for which it is designed
d) control box opens.

The guarantee does not cover damage due to normal wear and tear
Official safety regulations specify requirements that apply to the manufacturers of this machine relating to the careful review of safety hazards that may arise when this type of machine is used correctly. Therefore, TKS and our importer/distributor are not responsible for the functioning of components that are not shown in the spare-parts catalogue for this product.
TKS reserves the right to change the design of the product without this implying any obligations in relation to previously supplied machines.

NB! It must be possible to identify all enquiries relating to this product by the product's serial number; see page 12 on Machine identification **See chapter. 1.4.2**

1.3 Introduction

Congratulations on buying your new TKS product. You have chosen a functional, high quality product. All TKS products are designed and built in close cooperation with farmers to ensure optimal efficiency and reliability.

Please read this instruction manual carefully, and familiarise yourself with the machine's manner of operation before starting to use it. The machine is a highly advanced feed machine that operates unattended. It must be used in accordance with the relevant manufacturer instructions and other regulations.

Many different factors and variables can aff ect the performance and method of operation of the machine.
It is therefore very important to assess all known factors and adapt the way in which the machine is used accordingly.
A good understanding of the machine's method of operation and performance, together with a sound knowledge of feeding and feed types/consistency will ensure the best results.

Best Regards
TKS Agri AS

TKS Agri AS,
Kvernelandsvegen 100
N-4355 Kverneland
Norway

www.tks-as.no
e-post : post@tks-as.no
Phone : + 47 51 77 05 00

1.4 Technical data - FeedBelt
1.4.1 Model description and use

TKS FeedBelt is designed to transport different types of forage and concentrated feed via the feed trough. The feed is released down into the feed trough by means of a scrape carriage.
The scrape carriage is operated via a wire. The scraper can switch from right to left, allowing the feed to be placed on both sides of the feed trough.
The cabinet with operating screen is positioned as required in the area where filling takes place.

- The belt is powered by a gear motor in the drive roller
- The scraper is powered by a gear motor via the wire and is positioned with the aid of a sensor.
- The belt is fed forwards on top of a channel and returns on rollers placed inside the channel.
- The drive roller has a friction coating to improve the reliability of the belt operation.
- The counter-roller ensures a better connection with the drive roller.
- The belt and wire have sensors that indicate their movement.
- A brush is positioned against the belt next to the drive roller. The brush ensures that the belt is kept clean.
- The machine is installed at various heights above the feed trough.
- The channel is installed on portals or brackets with a maximum length of 6 m between them.
- The feed is conveyed onto the belt at the opposite end of the drive roller.
- Suitable side panels position the feed in the centre of the belt.
- Forage can be added to the belt from various filling sources.
- Feed must be fed onto the belt at an even pace, preferably from a conveyor.
- FeedBelt can operate multiple filling sources and conveyors, depending on the control cabinet.
- Forage can be dispensed on a time or weight basis.
- Minimum operating temperature -20°C.

NB! The instructions given in this operator’s manual apply to standard operating conditions. Individual circumstances may arise at the premises of the user that deviate from the instructions provided here. Changes to the machines and equipment as a result of such circumstances shall not constitute grounds for making a claim against the manufacturer or supplier.

NB!
Think safety when using the FeedBelt.
Individual users must observe the provisions, rules and standards that apply in the country concerned.

FeedBelt	
Belt width	500mm
Motor output - belt 2,2kW	230V - 14,1A
Scrape motor output 1,1kW	230V - 8,6A

Weight :	**Kg**
Belt section w/drive and return	217
3m belt section	55
Scraper carriage	29
Scrape reverser	20

1.4.2 Machine identification

The machine's serial number and the manufacturer's address are written on a plate on the machine. See the illustration on this page. The machine's serial number and the delivery year should be written below.
Please use this information when making any enquiries about spare parts or servicing.
This product is CE marked. This mark, along with the associated written EU confirmation, means that the product fulfilled. Is current health and safety requirements, and complies with the following directives: Machine Directive

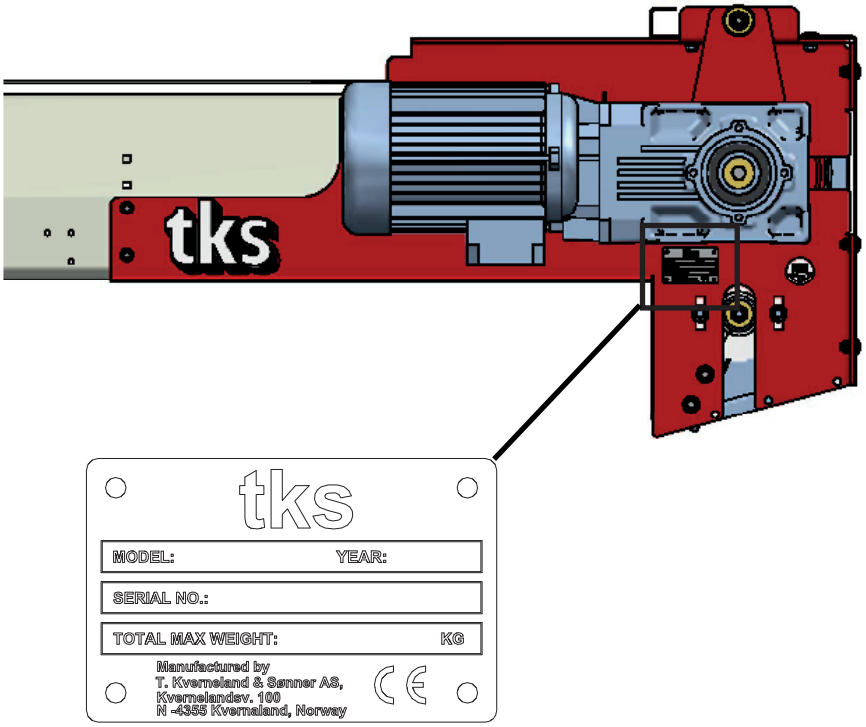

IFB_02

1.4.3 Main dimension - FeedBelt with 1 center-section

All dimensions in mm

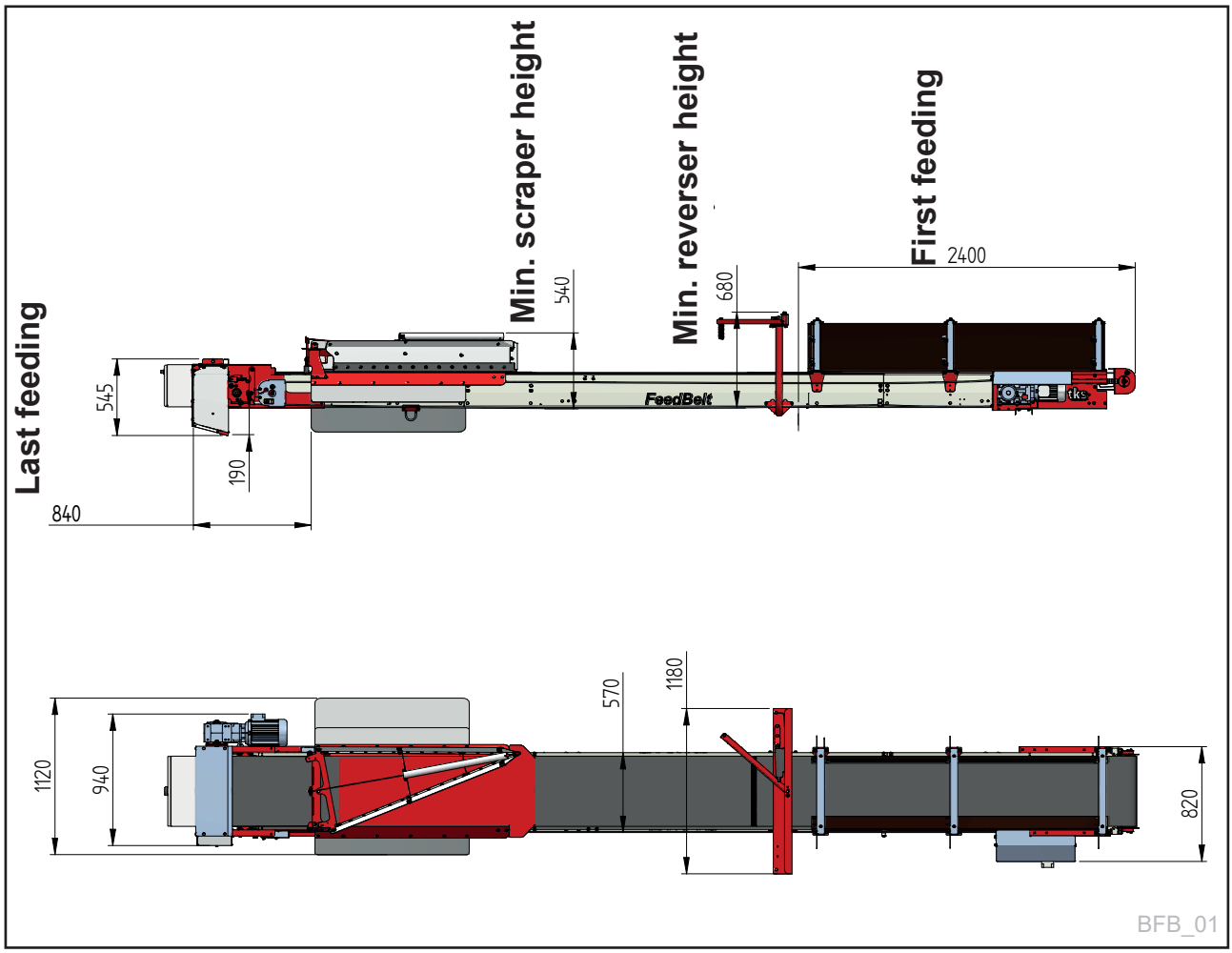

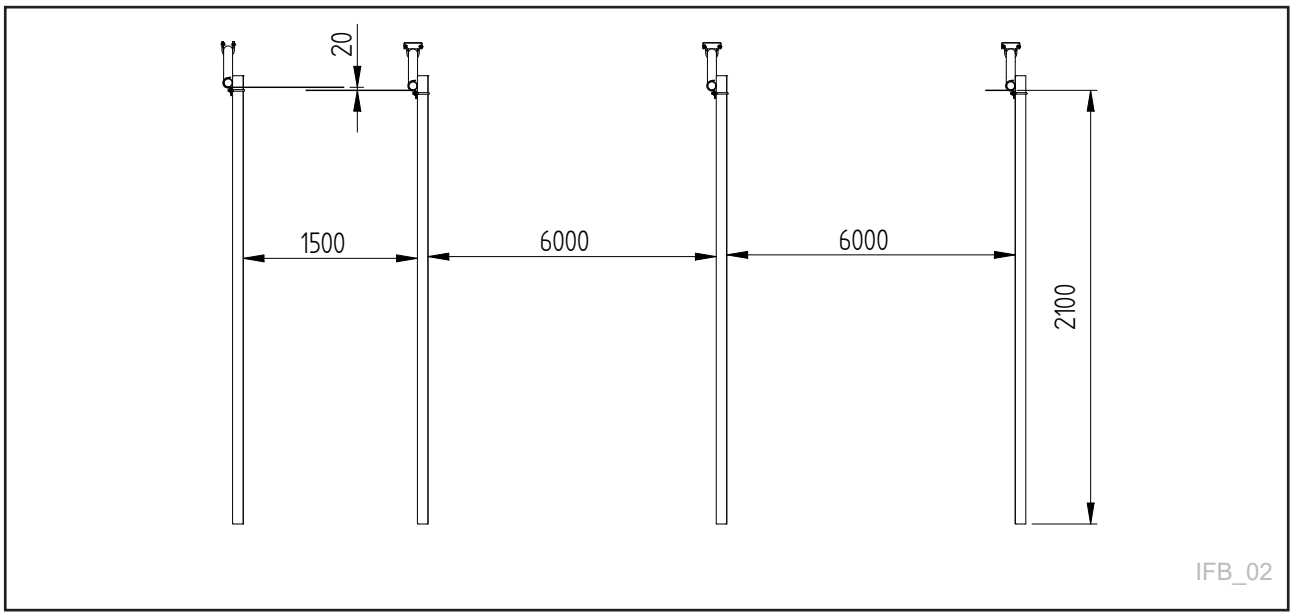

1.5 Safety

Please pay particular attention to this symbol. It designates a safety risk, and describes precautions that must be taken to avoid accidents.

Before operating, adjusting or repairing the machine, the user, technician or owner should familiarise himself with the safety instructions contained in this installation manual.
Be alert and take precautions when working with agricultural machinery. Read and observe the safety instructions in this instruction manual.

Safety at work is your responsibility!

1.5.1 General safety - instructions

Please read and understand these general safety instructions.

Use of the machine
The machine must only be used for the purpose for which it is designed.

The machine's method of operation
The operator must familiarise themselves with the machine's method of operation and function so that the machine can be used in a safe and appropriate manner.

Keep a safe distance
Keep your distance from working, rotating and moving parts

Be safety conscious
Never enter the machine when it is in operation. When performing maintenance, disconnect the power supply.

Protective guards
Check that all guards are in good order and installed correctly. Do not start the machine until this has been done. Damaged guards must be repaired or replaced immediately.

Spare parts
For safety reasons we recommend that you only use original spare parts. The use of third-party spares invalidates the product guarantee.

Maintenance

Ensure that the machine is properly maintained and is kept in good condition. Never attempt to change the mechanical workings of the machine.

Control panel

Product warranty is invalid if the control box opens.

1.5.2 Additional safety instructions

The machine is marked with warning signs ⚠. If these signs are damaged, they must be replaced.
The order number is shown on the illustrations in this section.
See Fig. 4 for their location on the machine.

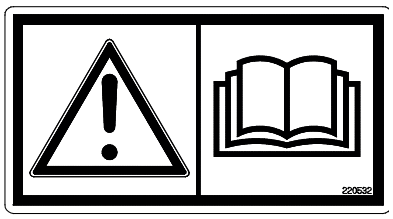

Fig. 1

Warning sign UH220532 (Fig. 1)
Be careful! Ensure that you read and understand the instruction manual before using the machine, and before making any adjustments or performing any maintenance

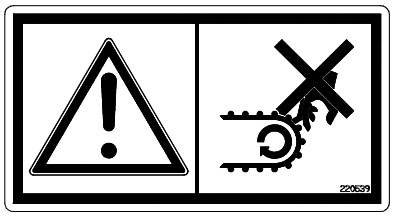

Fig. 2

Warning sign UH220539 (Fig. 2)
Finger fracture warning sign. Risk of finger fracture if fingers are trapped between the carrier and lower frame.

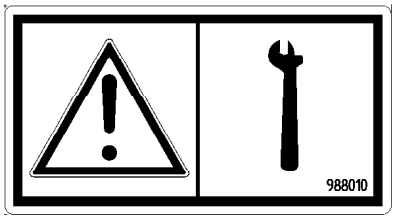

Fig. 3

Warning sign 988010 (Fig. 3)
The belt must be kept tight, it is therefore important and necessary to retighten the screws regularly.

1.5.3 Overview of safety risks

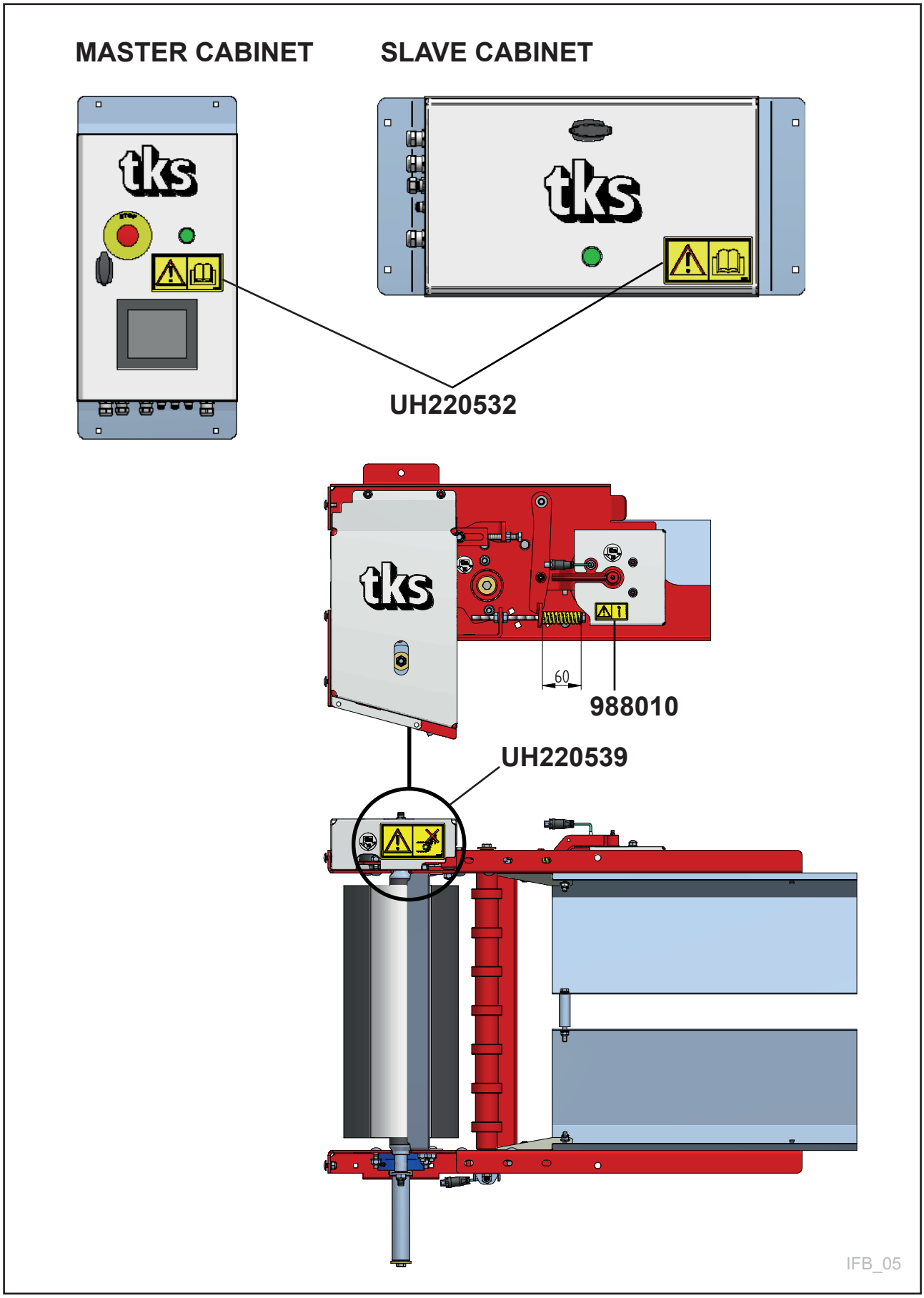

Fig. 4

1.5.4 Lifting FeedBelt during installation

Caution!
Only use approved lifting equipment

Ensure that no-one is underneath or near FeedBelt when the various sections are fitted into place.

1.5.5 New machine - caution

Read the operator's manual
Be particularly careful when starting a new machine for the first time. Installation faults, incorrect operation, etc. may lead to expensive repairs and loss of earnings. The TKS product guarantee does not cover damage resulting from failure to follow the recommendations contained in the instruction manual. Please pay particular attention to this symbol.
This is used to emphasise important information so that incorrect installation or use is avoided.

Be particularly attentive to the following when starting a new FeedBelt:
Check that FeedBelt has been correctly assembled and that the various sections are undamaged.

1.5.6 Installation and commissioning

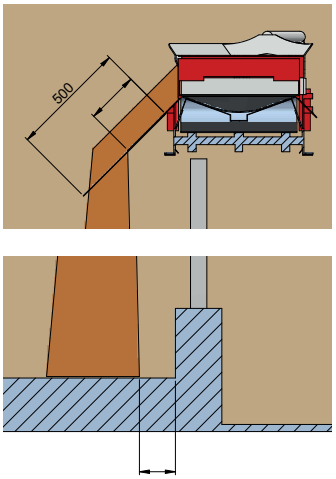

Fig. 5

1. FeedBelt is best installed indoors or under cover due to the potential effect of adverse weather on its operation.
2. FeedBelt is delivered to the customer packed in part-assembled sections.
3. Check for damage in transit before assembling and installing.
4. The following FeedBelt has assembly instructions.
5. FeedBelt must be calibrated prior to use.
6. The length of the guide plates must be adjusted to ensure the best possible positioning of the feed on the bunk feeder. **See Fig. 5**
7. Failure to ensure assembly and installation are in accordance with the instructions will invalidate the product warranty.

1.6 Recycling - waste to resource -

TKS's products rely on electrical and electronic components in order to work.
These fall under the generic term of EE products. TKS's products use typical components such as cables, switches, motors, control units, etc.

When TKS products are thrown away those components containing contaminants should be treated and sorted in such a way that they do not pollute the environment. Contaminants should be taken care of safely.

Distributors are obliged to accept EE waste from products in the range of goods they sell.
This waste should be kept safe and sent on to an approved waste recipient or treatment plant.
EE waste must be sorted and transported in such a way that it is not damaged or destroyed.
If you need further information on the treatment of EE waste, please contact your distributor.

TKS is a member of Renas.
(National program for the collection/treatment of electrical/electronic waste)

Best Regards
TKS Agri AS

2 Using the screen and PLC
2.1 Screen

The control system has a touchscreen, meaning that you can control it by touching the screen directly. You can touch the screen with your fingers or use a special stylus located in the control cabinet.
Do not press too hard, as this may damage the screen.
If the screen has not been active for a few minutes, it will enter screen saver mode.
The screen will be off in this mode. Press any part of the screen to reactivate it. The menu buttons are displayed on the left-hand side of the screen. Press the desired button. It is recommended you return to the Home screen after completing the setting.
See Fig. 6

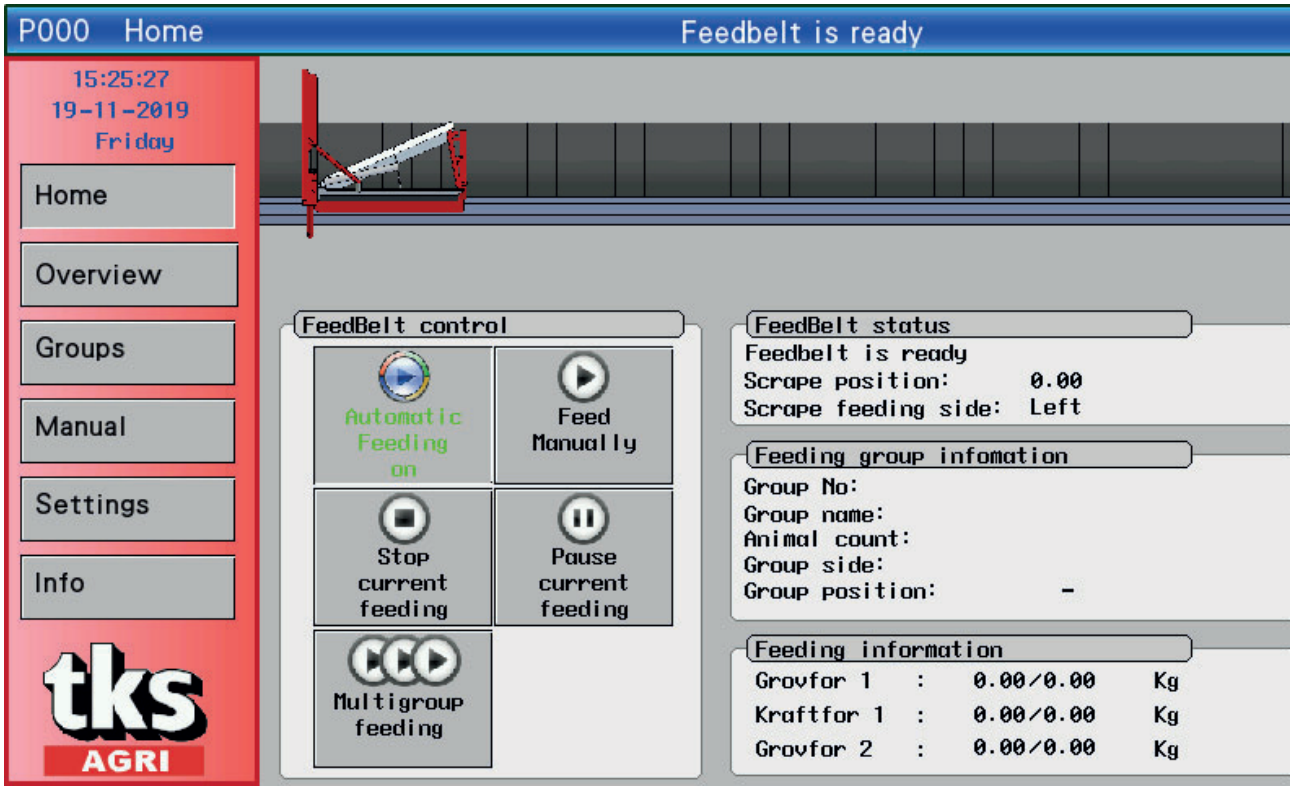

Fig. 6

2.2 Numeric keypad

Fig. 7

Values in fields with blue borders can be changed. Press on the number and a numeric keypad will appear on the screen.
The Max/Min value that can be entered in this fi eld is shown at the top of the window.

Enter a new value using the numeric keypad. If an incorrect value is entered, press the <— key and delete the most recently entered number. Press **CLR** to delete everything.

To enter a negative value, press – before the value. Once you have selected a value, press the **ENTER** button.
This will save the value and close the keypad window.

To cancel, press **X** in the upper right-hand corner. The old value will continue to be active.
To enter times in the feed dispensing schedule window, begin by entering hours – then press period. Now enter minutes.
Make sure that the time is correct.
For example, if you enter 12.65, this will be ignored – enter 13.05 instead.
See Fig. 7

2.3 Alphabetic keypad

When you enter values with text (e.g. name of animal) the screen will display an alphabetic keypad:

When editing a text field, the old text is displayed on the screen.
New text can be entered, and the old text will disappear.
Use the **Caps** button to switch between uppercase and lowercase letters

Press the **BACK** button to remove the last symbol registered, or press **Clear** to delete all text, then enter the new text.
Note that there is a limit on the number of letters in the field. The first letters will be deleted if a long string of text is entered.

When the text has been entered, press the **ENT** button. This will save the text and the keypad window closes. If you want to cancel, press the **X** or **Esc** button
and the old value will remain active.

Fig. 8

2.4 Selecting values

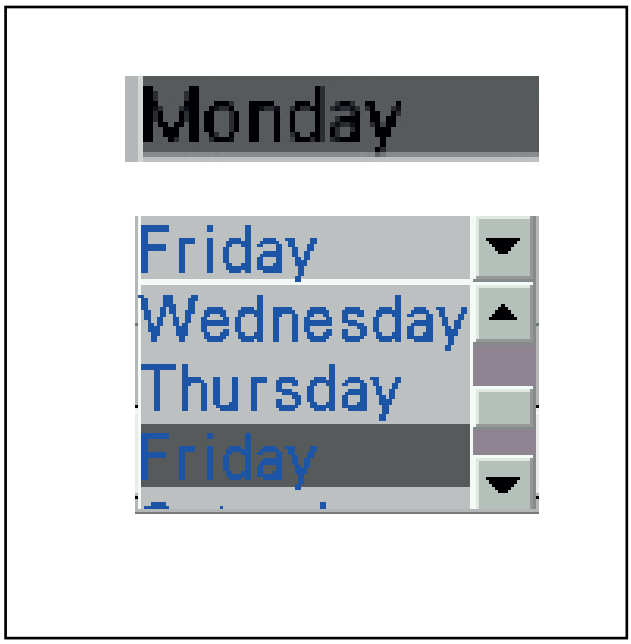

Fig. 9

Selecting pre-programmed values from a list.
Select a value, and select value from a list.
See Fig. 9

2.5 On/off button

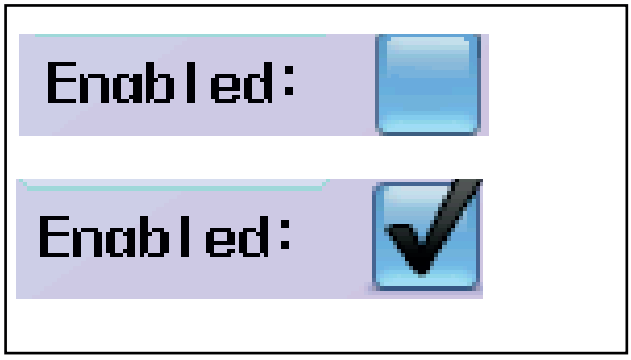

Fig. 10

- Enable or disable a function using the on/off key.
- Blank – disabled, ticked – enabled

See Fig. 10

3 Operation
3.1 Menu Home

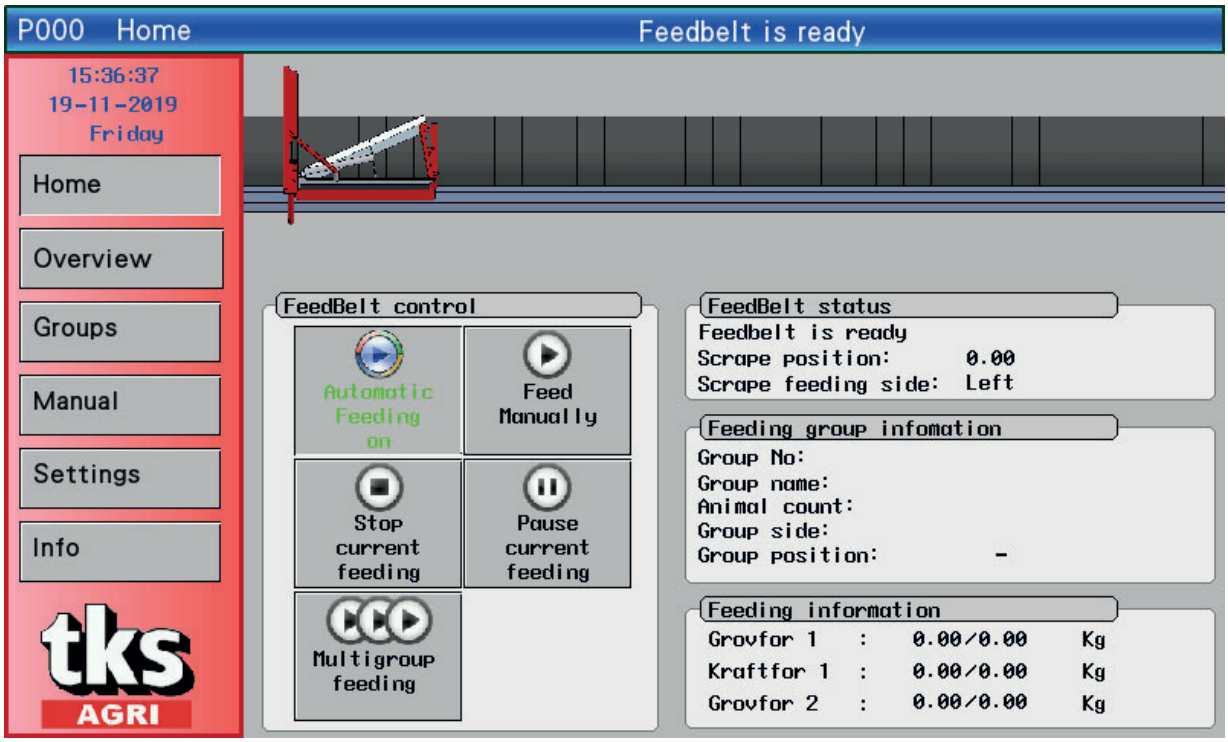

Fig. 11

The **Home** screen displays the FeedBelt menu on left side. Clock and date are displayed at the top. The top of the screen shows a blue line with the current status of FeedBelt. A picture of FeedBelt is displayed on the screen. During feeding, the scraper and movement of the feed are shown in animation.

FeedBelt operation: Keys

- **Automatic feeding on/off** – the key automatically activates feeding from the feeding schedule. When automatic feeding is enabled, the key is green.
  FeedBelt status will become **ready** instead of **off**.
- **Manual feeding** – the key will open the manual feed window.
- **Stop ongoing feeding** – the key will stop the current feeding. Feeding will not stop immediately – first it will stop feeding supply, then clean the belt, and then stop.
  NB! Upon immediate stop of FeedBelt, press the emergency stop button on the cabinet door.
- **Pause ongoing feeding** – the key will temporarily pause the current feeding. Press pause key to continue feeding.
- **Multi-group feeding** – The key opens a window to program several group feeding sessions at the same time.

FeedBelt status:

Status of current FeedBelt process.
It can be:

- **Off** - FeedBelt is off.
- **Ready** - FeedBelt is waiting for a new feeding session from the schedule.
- **Reversing** – The scraper swaps feeding side.
- **Positioning** – The scraper goes to the start position for the feeding group.
- **Start** – FeedBelt waits for the feed to make contact with the scraper.
- **Feeding** – FeedBelt is feeding.
- **Stop** – FeedBelt stops – clean the belt
- **Pause** – Feeding is temporarily on hold.

See Fig. 11

Scraper position – Shows where the scraper is. The number indicates approximately the number of meters from the foremost position.
The scraper's feeding side – Left / Right. Left is on the left-hand side when looking at the scraper from the front. **See Fig. 12**

Feeding group info.
When FeedBelt is feeding, the current feed group information will be displayed in this field.
- Group no
- Group name
- Mumber of animals
- Group side
- Group position (from - to)

Feeding info.
Shows the amount of feed:
The current amount feed so far in this feeding / amount of feed for this feeding session for 3 feed types.

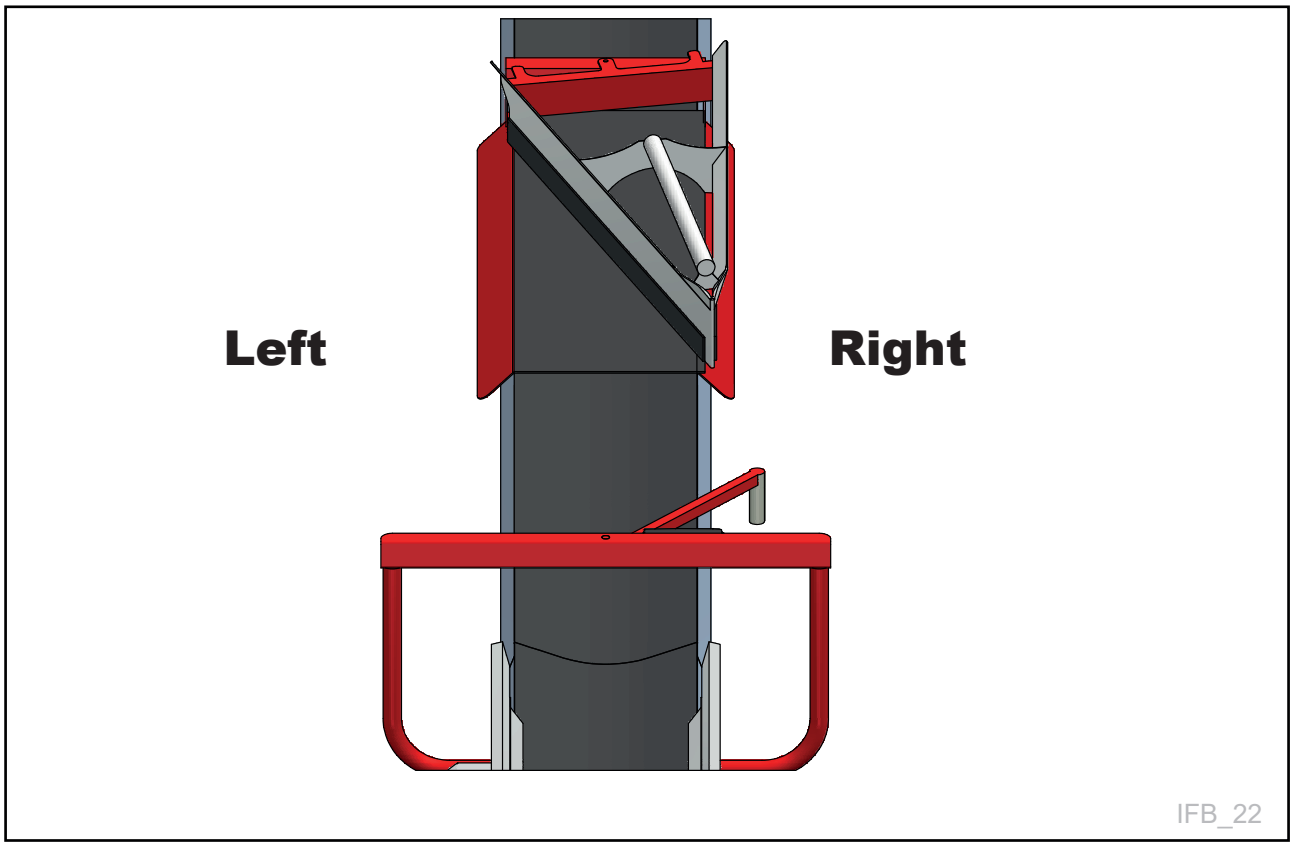

Fig. 12

3.2 Menu Overview

Fig. 13

The screen displays a list of all your animal groups that are programmed. When the number of animals is set to 0, the feeding information is hidden.

The list shows:

- **No** – fedding group number
- **Group** – name of the group
- **D** – number of animals in the group
- **T** – number of feedings per day
- **Forage 1** – amount of forage 1 for the group pr. day
- **Concentrate 1** – amount of grain for the group pr. day
- **Forage 2** – amount of forage 2 for the group pr. day

Key column:

For each group there are 3 direct keys to the setting and information menu.

G – go to group settings

L – view logs of feedings

F – start a manual feeding

The page shows information about 10 groups.

The keys at the bottom change sides for several groups.

See Fig. 13

Fig. 14

Manual feeding popup window
Make settings and start manual feeding

- **Group no** – Number of the selected group to be fed.
- **Group name** – names of animals.
- **Antall dyr** – number of animals.
- **Group position** – start - stop position.
- **Feeding side** – feeding side
- **Feed type** - When the window is displayed, FeedBelt has calculated how much feed is to be dispensed. The calculation is based on the number of feeding sessions in the schedule. The amount can be changed before manual feeding. The feeding session will not affect the balance function.
- **Log feeding to balance function** – If uniform feeding is required each day and the balance function is enabled, this box must be checked. FeedBelt will then automatically adapt next feeding.
- **Start feeding** – press key to start feeding manually
- Cancel without feeding, close the window with the cross in the upper right corner.

See Fig. 14

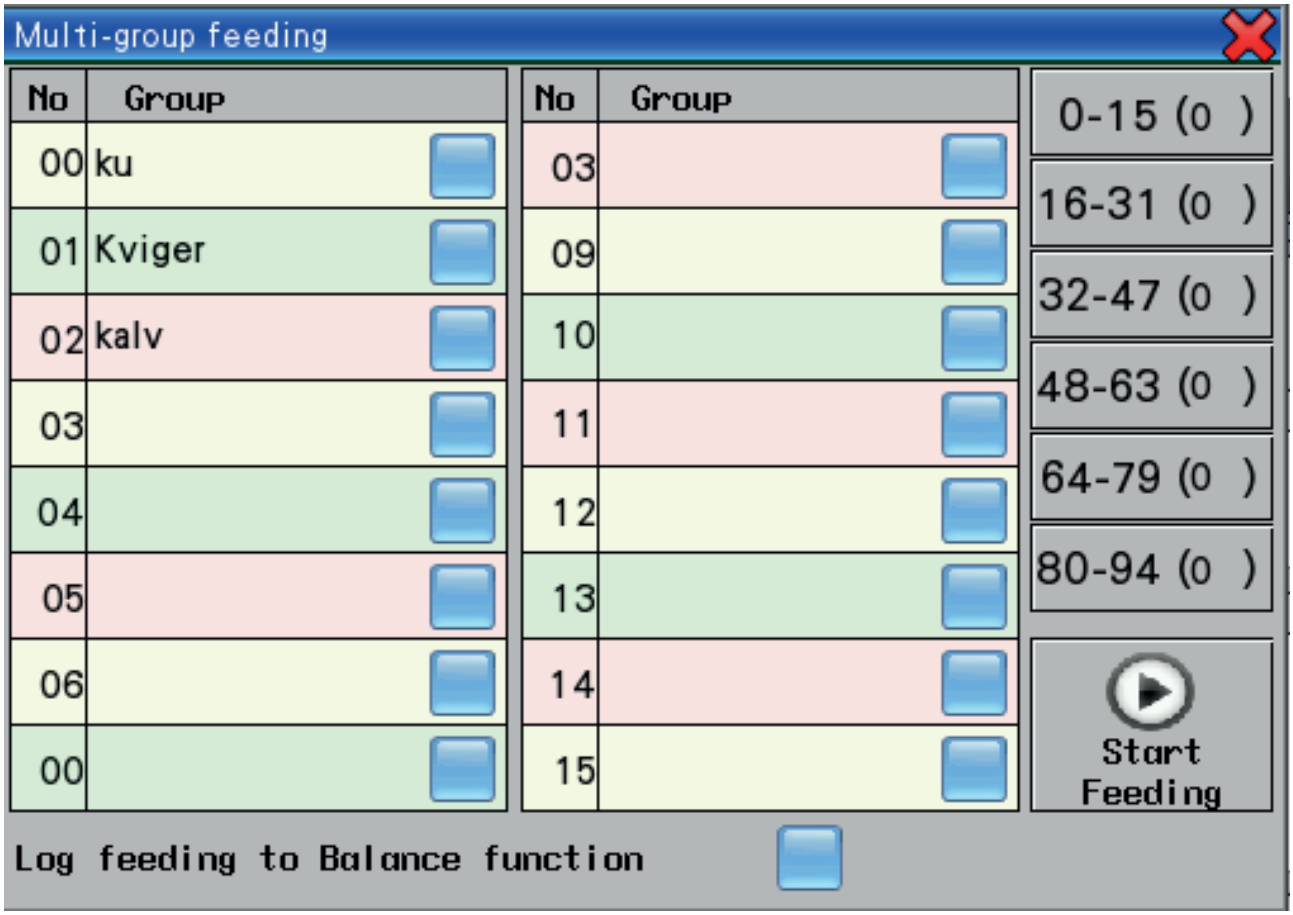

Fig. 15

Multi-group Feeding - One-touch multi-group feeding

- The Group Selection window appears.
- Select one or more groups
- Selected groups are marked with a check mark
- Inside the parenthesis on the right you will see how many groups are marked on the different pages.
- The groups are fed at a set amount from each group
- Log feeding to balance function – whether uniform feeding is desired per day. day and balance function is activated it should be checked off here. FeedBelt will then adjust the amount to the next feeding automaticly.
- Start feeding
- All groups will be fed one after the other 35/5000
- Next time Multi-group feeding opens, the previously selected groups will be selected.
- Cancel witout feeding, close the window with the cross in the upper right corner.

See Fig. 15

3.3 Menu Groups

Fig. 16

The screen has 3 tab pages that can be toggled using the buttons at the top.
- Feeding schedule
- Step adaptation
- Temporary

Screen for Feeding Plan
- Displays the feeding settings for each group.
- Scroll between the groups with the arrow keys, or press the number and enter the desiredgroup number.
- The group name is displayed if it has been entered (changed in settings/define group).
- Animal count – number of animals in the group. This must be correct, since the calculation of the feed amount takes the number of animals into account.
- Schedule - this is where the start times of the feeding sessions are specified. 12 different start times can be set. Press the hour indicator and enter the desired time. Enable therelevant time by checking the box.
  The start time can coincide with start times for other groups.
  FeedBelt queues the feeding sessions and executes them in succession.
- Amount Animal/day – amount of feed for 1 animal for one day. 3 different feed types.
- Total/day - amount of feed for the entire group for one day. Calculated.
- Group/feeding - amount of feed for the entire group for each feeding session. Calculated.

See Fig. 16

Fig. 17

Screen for Step Adaptation

Step adaptation is a function where the amount of feed can be increased or reduced to a new amount distributed over a time period. This applies individually to each single group.
It can be of benefit when increasing/reducing the amount of concentrated feed.
FeedBelt calculates a uniform rise or reduction in feed over the time period.

- Select the group to which step adaptation is to apply.
- Enable step adaptation.
- Enter the period in days (only whole days).
- Enter the amount of feed to be dispensed after the adaptation period is finished.

When the step adaptation function is in use, a yellow light will show on the tab button for the relevant group.
After the adaptation period is over, the light will go out and the group dispenses feed using the new amount of feed.
See Fig. 17

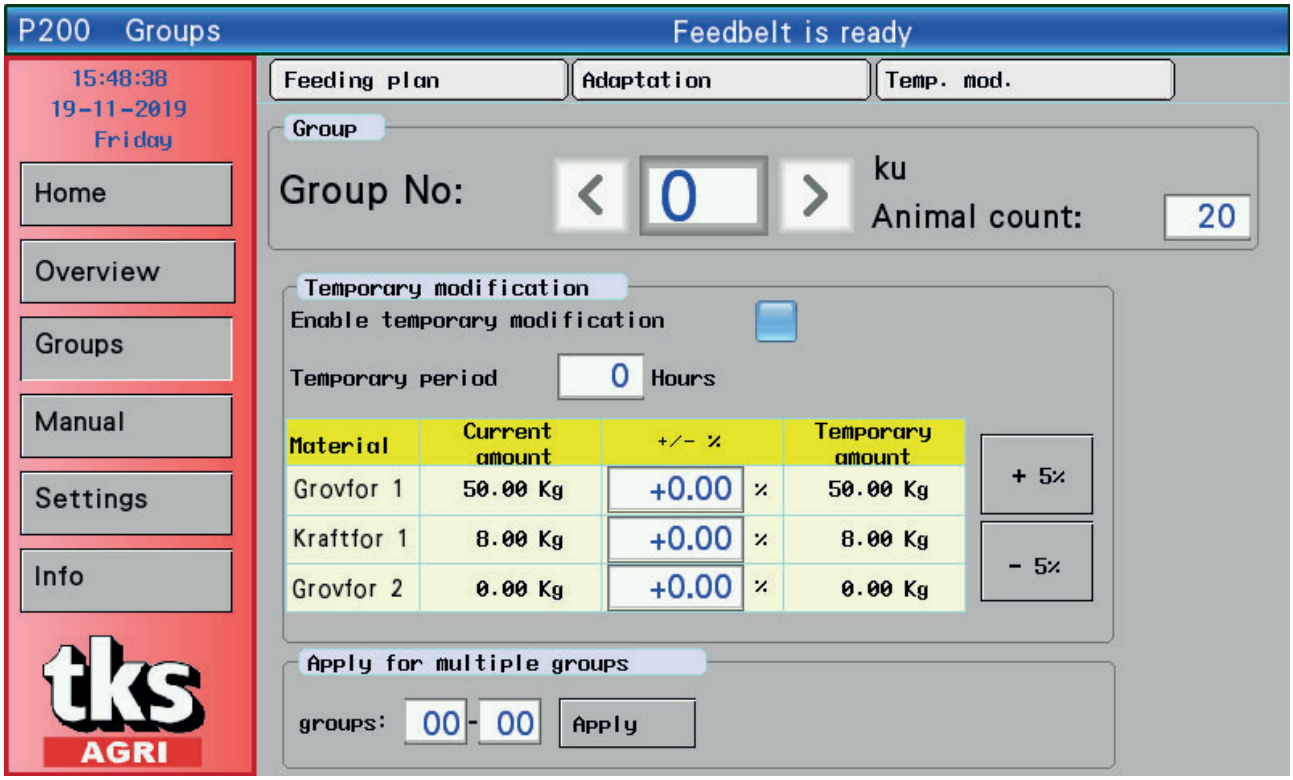

Fig. 18

Screen for Temporary Modification

The feed amount can be adjusted temporarily based on a set amount for a number of hours.
This may be useful in special cases. One example is when the filling sources are outside and the feed dries out on warm weather days.
The dry matter content of the feed changes, and the animals need a different amount of feed.
When night falls and the feed takes in moisture from the dew, the amount of dry matter returns to normal. This is a good time to end the temporary period, and the function is automatically disabled.

- Select group.
- Enable the function.
- Set the length of the temporary period. Number of hours from now.
- Enter the percentage increase/reduction for each feed type.
- The shortcut keys + 5%/-5% result in a 5% change for all feed types at the same time.

If you want the setting to apply for multiple groups, enter the relevant group numbers on either side of the "-" and press **Apply.**
When the function is in use, a yellow light will show on the tab button for the relevant group.
See Fig. 18

3.4 Menu Manual

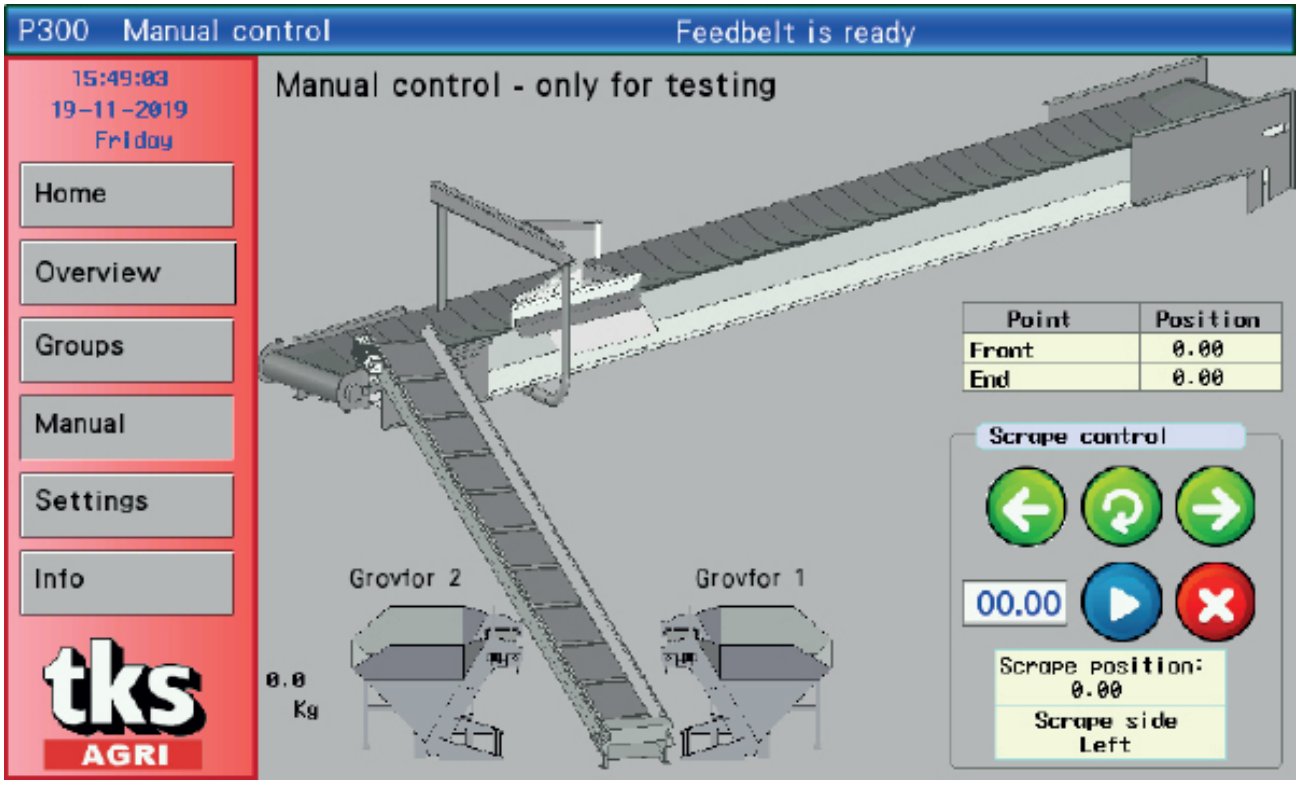

Fig. 19

The screen shows an overview of the FeedBelt system as installed.
This screen is for test-running the machine only.
Manual feeding is performed in the screen menu Home.
The end positions and operating buttons for the scraper are displayed on the right.
The various units can be started manually by pressing on them. Pressing them again will stop them.
When the selected unit is in motion, the colour changes to red.

The following units can be operated:

- Belt
- Scraper
- Scraper reverser (changes side without stopping)
- Conveyor belt
- Filling source 1 and 2. Press on the unit and hold down to run.
- Concentrate 1 and 2. Press on the unit and hold down to run.

Scraper control

- The left arrow moves the scraper forward to the filling location. Press and hold down the button.
- **NB!** There is a long response time. You will need to hold for a while before the scraper begins to move.
- The right arrow moves the scraper backwards. Press and hold down the button.
- The centre button with the circular arrow will automatically reverse the scraper.
- Go to a pre-determined position. Enter the position in the numeric field.
- To start, press the blue button. The scraper goes to the position and stops.
- Stop can be pressed when the scraper has been set in motion using Start.
- The bottom boxes show the current scraper position and side. The number indicates the approximate length in metres from the front position nearest the filling location.

See Fig. 19

3.5 Menu settings

Fig. 20

Time - Language
- Time and date
- Language
- Clean screen

Layout:
- Define groups og nissene
- Balance function

Installation
The icons are basically locked. This is indicated by them being greyed out.
To access menu category installation, login required with password.
- Log in / out
- System
- Calibration
- Speed
- Reset tysseladden

See Fig. 20

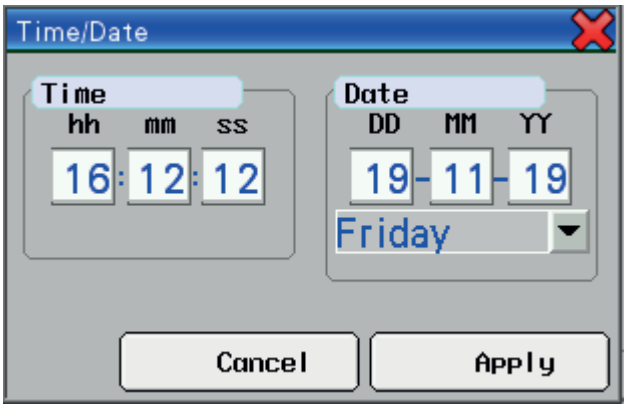

Fig. 21

Time / date setting

- Timer **hh**, minutes **mm**, seconds are adjusted individually.
- Dag **DD**, month **MM**, år **YY** adjusted individually.
- Weekday is selected from list
- Save, press **Apply.**
  See Fig. 21

Fig. 22

Choose language
NB: In earlier software versions, not all languages are available.
Languages that are not available are marked with a grey blocked symbol.
Close the window by pressing the X in the top right corner.
See Fig. 22

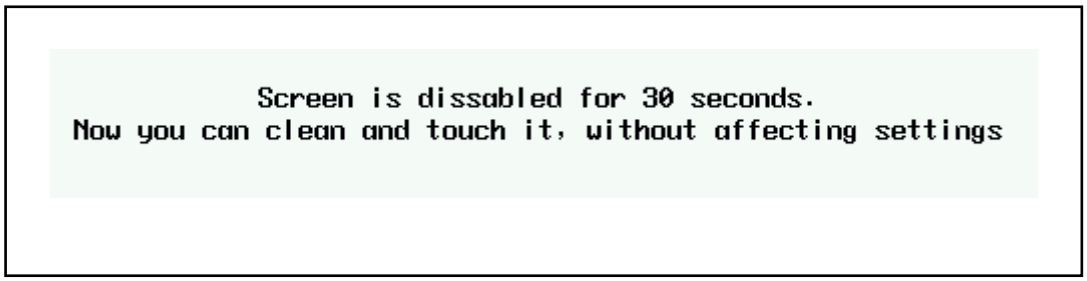

Fig. 23

Clean screen
The screen will go white for 30 seconds for cleaning.
The screen can be touched without affecting the program.
Use a soft cloth to wipe it. **See Fig. 23**

Fig. 24

Define group

- This is where the feeding groups are associated with the pens in the cowshed.
- Toggle between the groups using **< and >** or enter a number.
- Enter the name of the group. Type of animal and age, where applicable.
- Enter the number of animals. This parameter is used to calculate the feed amount.
- Control the scraper forwards and backwards.
- Move the scraper to the start position. Press the Save button and hold down for 3 seconds.
- Move the scraper to the end position. Press the Save button and hold down for 3 seconds.
- Select the scraper side (Left/Right) from the list. **See Fig. 24**
- The feeding side is the side on which the feed is placed when looking at the scraper from the front. **See Fig. 25**

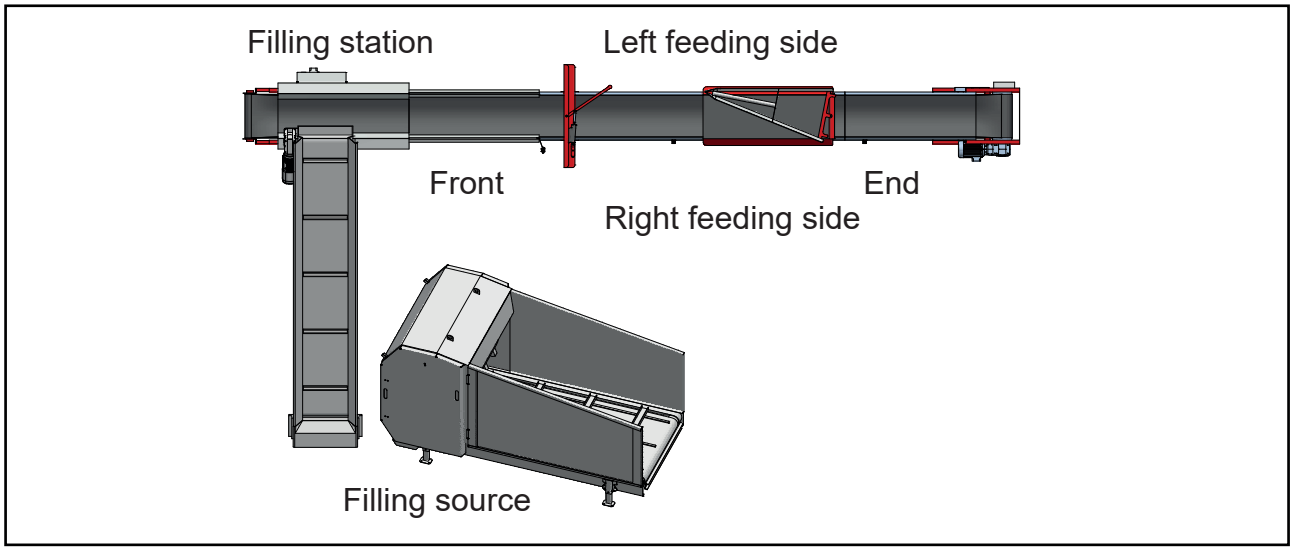

Fig. 25

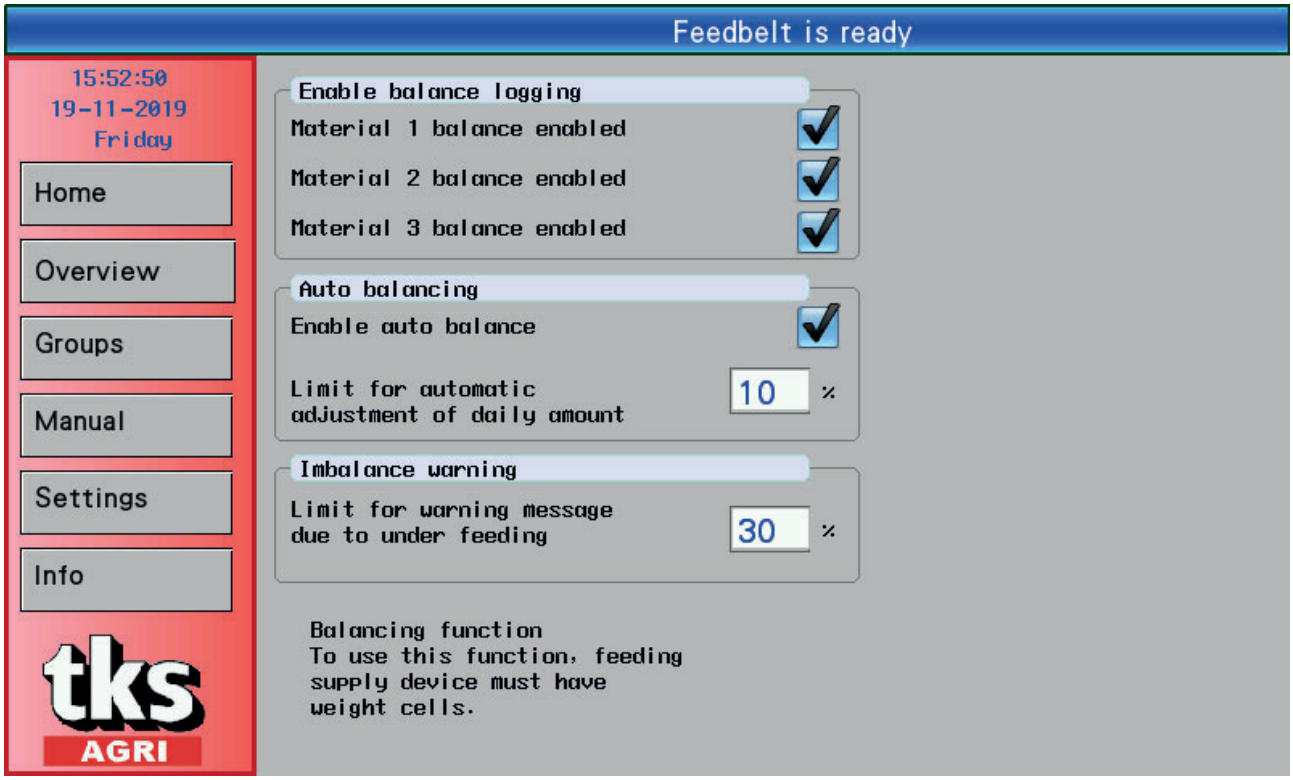

Fig. 26

Balance

- The balance function requires that the filling source stands on weighing cells and is set forweighing cell operation.
- The function logs how much feed is fed at any given time. If too much is fed in one feeding session, the next feeding session will feed less. FeedBelt will try to get as near to the set feed amount as possible per day.
- Enable balance logging for the correct filling source by checking the box. Logging is enabled but there is no regulation of the feed amount.
- Automatic balancing. Enable the regulation function.
- The limit for regulation is specified.
- This specifies how much FeedBelt can allow and feed more/less per feeding session in order to maintain a uniform feed amount.
- If a feeding session is aborted, FeedBelt will try to feed more on the next feeding session so as to even out the feed supply to the animals.
- Imbalance warning. Limit for warning message if too much or too little is fed.
  See Fig. 26

Fig. 27

Log on / Log out
Access to the installation settings; log in using a password.
Enter the password **21212**. Press Login. **See Fig. 27**

If you want to lock the settings again, open this window and press Logout.
If the main switch is pressed or an error message appears, you will automatically be logged out.
Press **X** to close the window.

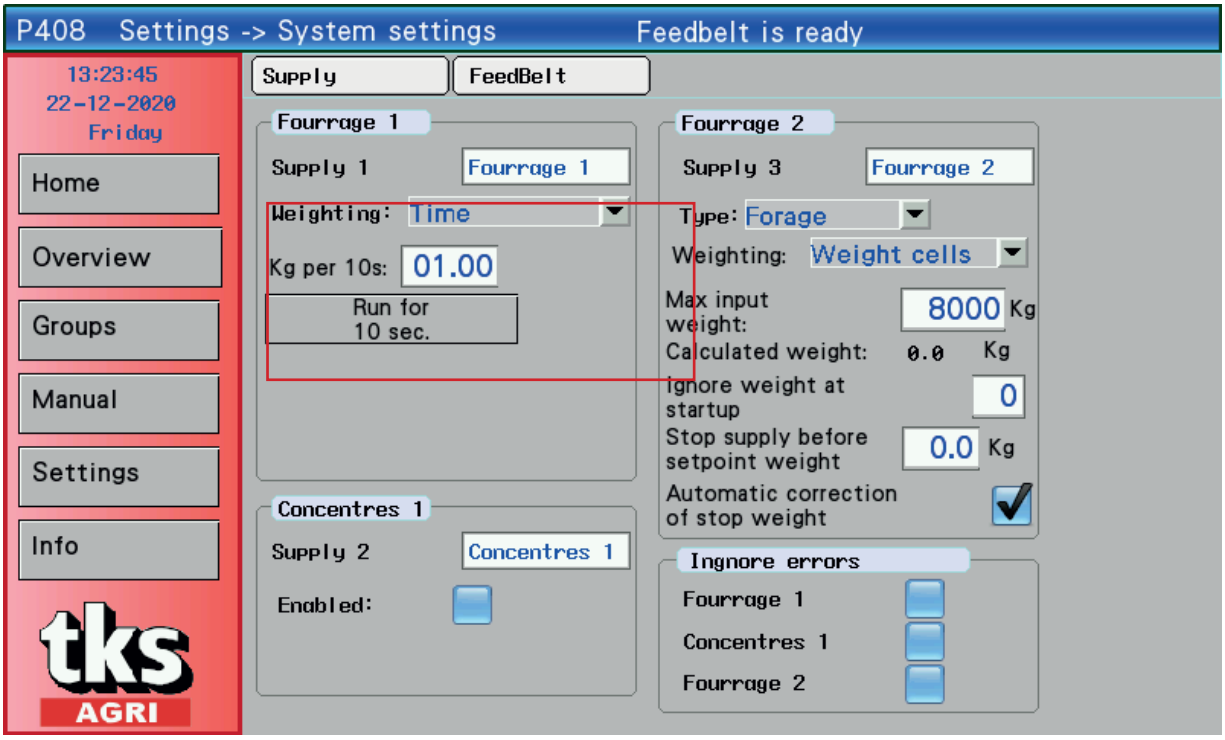

Fig. 28

System settings

- Filling source tab page
- **Forage 1** – settings for filling source 1. This is always forage.
- Name filling source 1. (The heading is also changed).
- **Weighing** – Toggle between **Time** or **Weighing cells**. For weight control, weighing cells must be installed on the filling source.
- **Time** – The weight is calculated by time, kg/s. Calibration is required.
- Perform calibration. Press the button: **Run for 10 sec.** Collect and weigh the feed.
- Enter the weight (kg) in the box.
- See **Forage 2** for the weighing cell settings.

- **Concentrate 1** – Settings for filling source 2. This is always concentrated feed.
- Name filling source 2. (The heading is also changed).
- Enable by checking the box.
- The weight is calculated using pulses kg/100 p. Calibration is required.
- Perform calibration. Press the button: **Run for 100 p.** Collect and weigh the concentrated feed.
- Enter the weight (kg) in the box.
- **Forage 2** – Settings for filling source 3.
- Name filling source 3. (The heading is also changed).
- This filling source can be set to forage or concentrated feed, or it can be disabled.
- **Weighing** – Toggle between Time or Weighing cells. For weight control, weighing cells must be installed on the filling source.
- **Weighing cells** – The weight is registered directly.
- **Max input weight** – Maximum value from the weighing cell amplifier.
  The value must be adjusted at the same time as setting up the weighing cell amplifier.
- **Calculated weight** – Shows the same value as the weighing cell amplifier.
  If it differs, check the "Max input weight" value.
- **Ignore weight at start-up** – On start-up of the filling source there will always be irregularities. This lack of regularity can be skipped for a few seconds. Enter the number of seconds.
- **Stop supply before setpoint weight** – Depending on the type of filling source, these have different stop times. In some cases, the filling source will deliver feed after it has stopped. This can be prevented by stopping before the specified weight has been reached. Enter the number of kg.
- **Automatic correction of stop weight** – With this function enabled, FeedBelt will correct the weight in the field “Stop filling source before setpoint weight”, so that this value is optimised.
- **Ignore errors** – If this box is checked and an error message appears on this filling source, FeedBelt can still feed from the other filling sources without interruption.

See Fig. 28

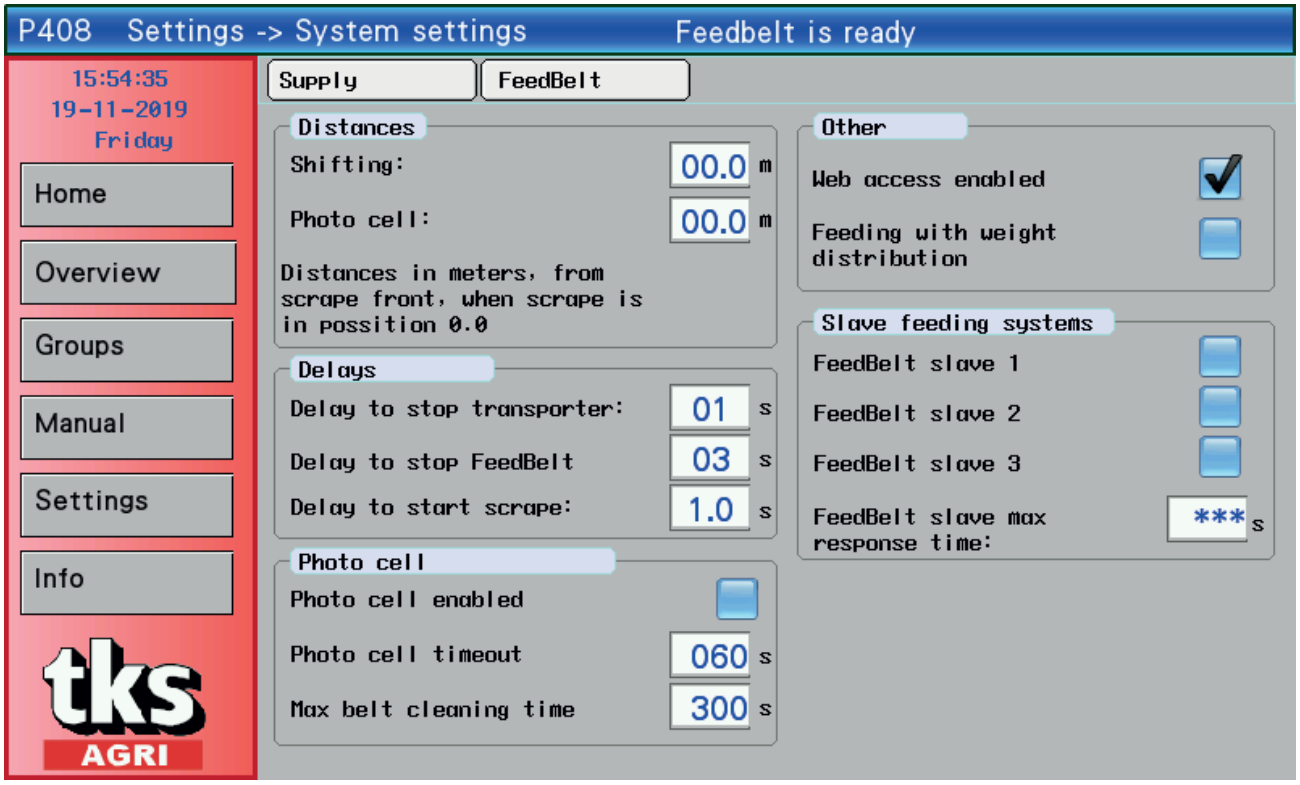

Fig. 29

System settings

FeedBelt tab page. **See Fig. 29**

Distances

- **Reversal –** This is where the positioning of the scraper is adjusted for reversal. The reversing lever must reach 10 cm into the pipe. **See Fig. 30**
- Perform an automatic scraper reversal in manual operation to check the setting.
- **Photocell –** Move the scraper as far forward as possible in manual operation.
  Measure the distance **(L)** between the photocell and the front of the scraper.
  See Fig. 30 Enter the value.

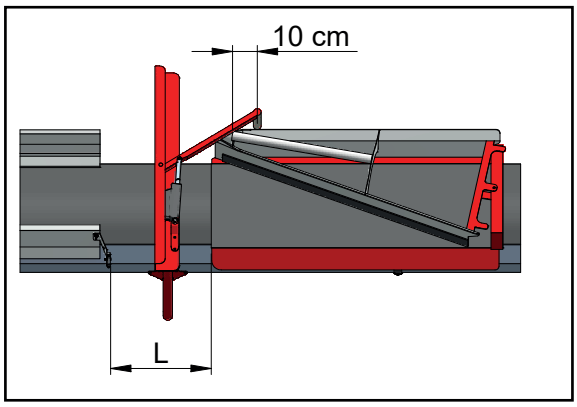

Fig. 30

- **Delays**
- **Stop conveyor –** Discharge duration for the conveyor.
- **Stop FeedBelt –** Discharge delay for FeedBelt. Ensures the scrapes off all the feed.
- **Start the scraper –** Start-up delay for the scraper. Ensures the scraper is not moving before the feed
  arrives.

Photo cell

- **Photocell enabled –** Enabled by checking the box.
  FeedBelt can be operated without the photocell. The feed will not be positioned accurately.
- It can only be operated without the photocell when there are problems with the photocell.
- **Photocell timeout –** After this time, FeedBelt will stop and send an error message stating that no feed is arriving. If a long conveyor is used between the filling source and FeedBelt, this time must be adjusted upwards.
- **Max belt cleaning time –** Maximum time to run FeedBelt clean after the photocell ceases to register feed on the belt. After this time, the belt stops, even if the belt is not fully clean.

Other

- **Web access enabled –** Enabled by checking the box.
  It means that the screen can be transferred to remote operation.
- It requires a wireless router to be installed on FeedBelt.

- **Feeding with weight distribution –** Enabled by checking the box.
  FeedBelt feeds the group with a slow movement of the scraper and using only one pass.
- This function requires weighing cells to be installed on the filling sources.

Slave system

FeedBelt slave, maximum response time

- FeedBelt can be set up as a master to feed more slave FeedBelt
- Up to 3 slaves can be connected.
- Each slave is controlled with its own FeedBelt Lite control.
- Activate the various slaves.
- Each slave gives feedback if it's feeding. If the master does not receive feedback within the specified response time, the feed will stop.

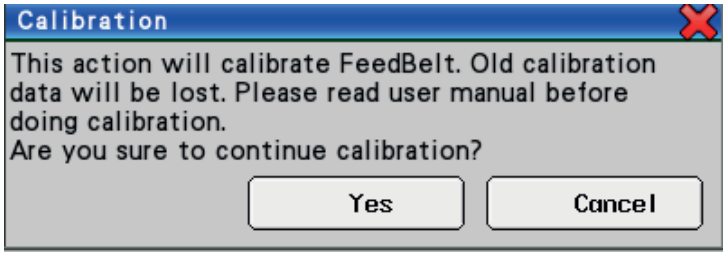

Fig. 31

Calibration

- Used to calibrate the scraper so that its end positions are set.
- **Important!** Before calibration, you will be asked to confirm whether you wish to perform a calibration. On confirmation, the old calibration values will be deleted and you will not be able to dispense feed. **See Fig. 31**

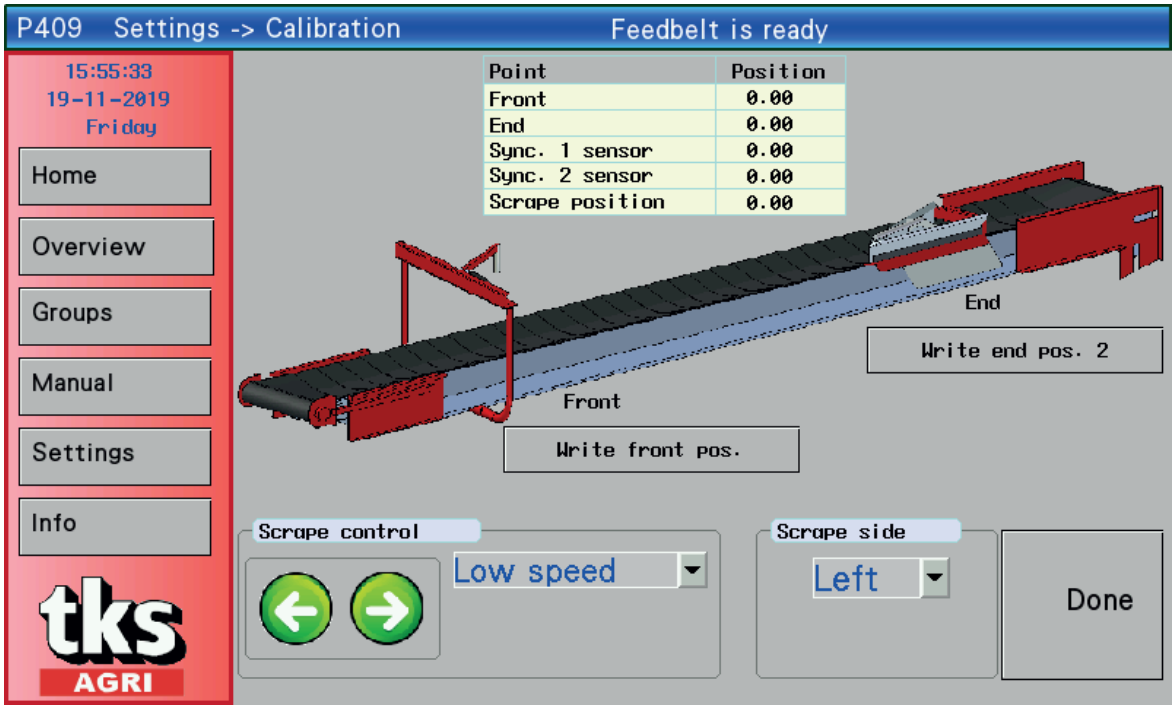

Fig. 32

Calibration screen

- Use the scraper left/right control buttons to control the scraper.
- <u>**NB:** Exercise caution when operating the scraper.</u>
- Ensure that the scraper is not operated too far forward or back. This may damage the scraper and wire pull.

Calibration steps

- Move the scraper to the front (filling station). **See Fig. 32.** Use Low speed.
  There must be a minimum clearance of 10 cm before the scraper comes into contact with fixed components.
- Press the button **Save front pos.**
- Move the scraper to the end (the belt drive end). **See Fig. 32.** On long distances **High speed** can be used. There must be a minimum clearance of 10 cm before the scraper comes into contact with fixed components.
- When the calibration process is complete, press Done.

- Check the scraper side. The scraper's left side is on the left-hand side when looking at the scraper from the front. **See Fig. 33a** for left and **Fig. 33b** for right.
- If necessary, swap round in the list so that the setting matches the actual side.
- The table above shows the values of the positions of the scraper at the front end, the drive end, and the sync. 1 and sync. 2 sensors.
- When the calibration process is complete, press **Done.**

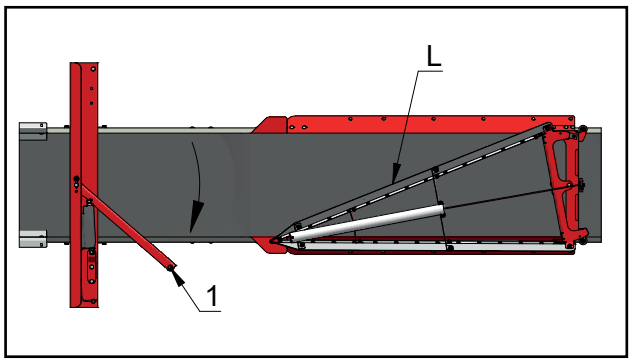

Fig. 33a

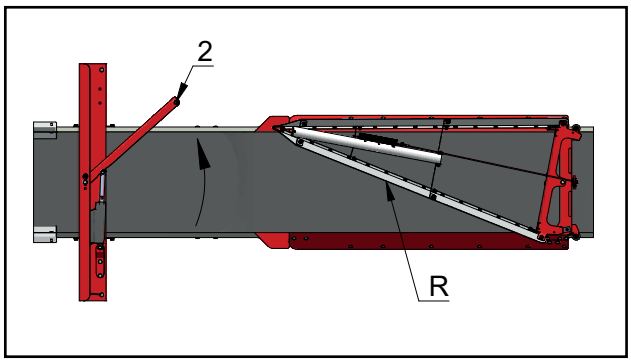

Fig. 33b

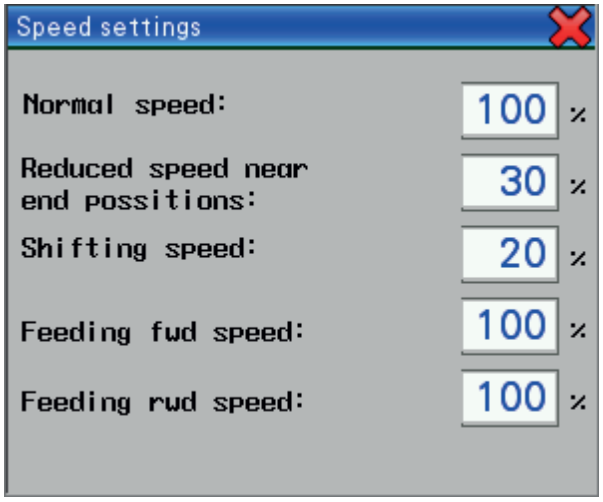

Fig. 34

Speed

The speed of the scraper can be adjusted to obtain a better work flow and accuracy of stop positioning.

- Normal speed – Is active in the program when the scraper is being moved to a position.
- Reduced speed – Is active when the scraper is being moved towards a set group position.
- Reversing speed – Is active when the scraper is due to be positioned in the scraper reverser.
- Feeding speed, forward – Is active when the scraper is moving in the same direction as the belt on feeding.
- Feeding speed, return – Is active when the scraper is moving in the opposite direction to the belt on feeding.

See Fig. 34

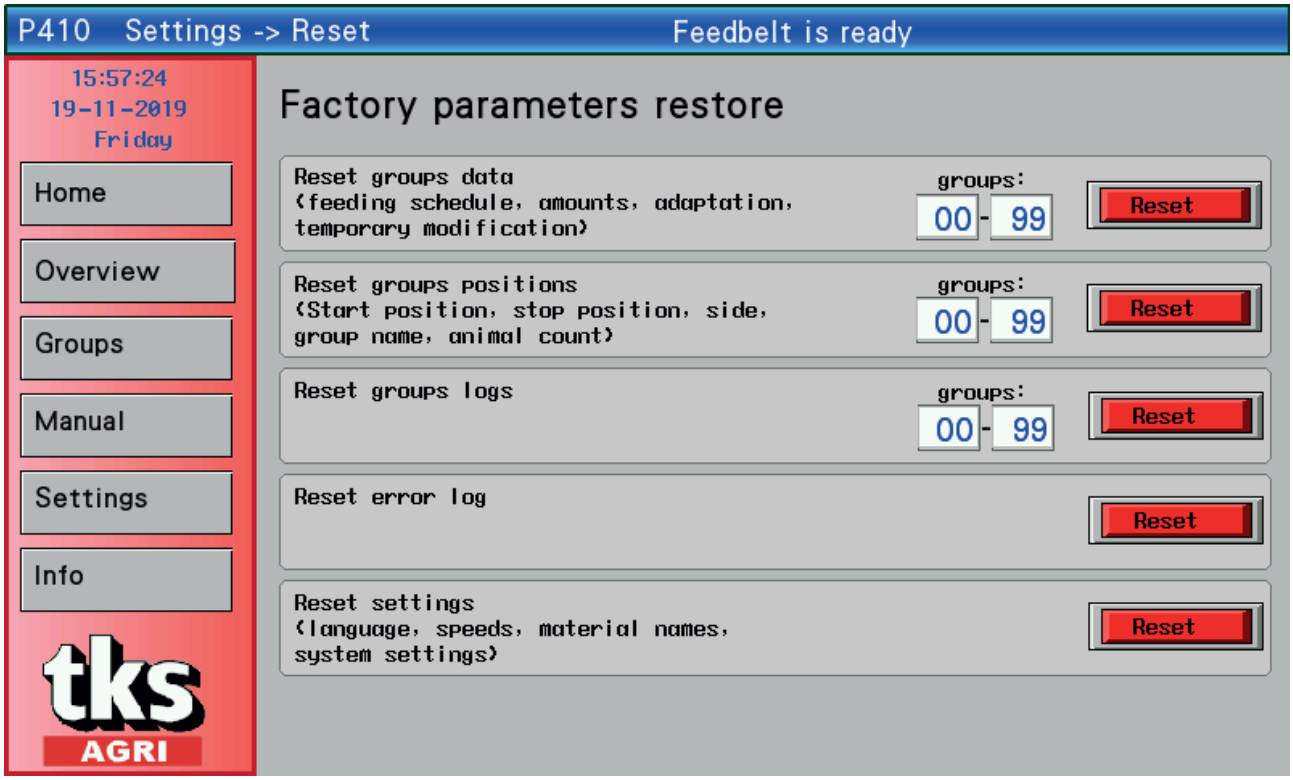

Fig. 35

Reset

- The factory settings are restored.
- See the screen and select what is to be reset.
- Enter the group number either side of the "-" to reset subsets of data.

See Fig. 35

3.6 Menu Info

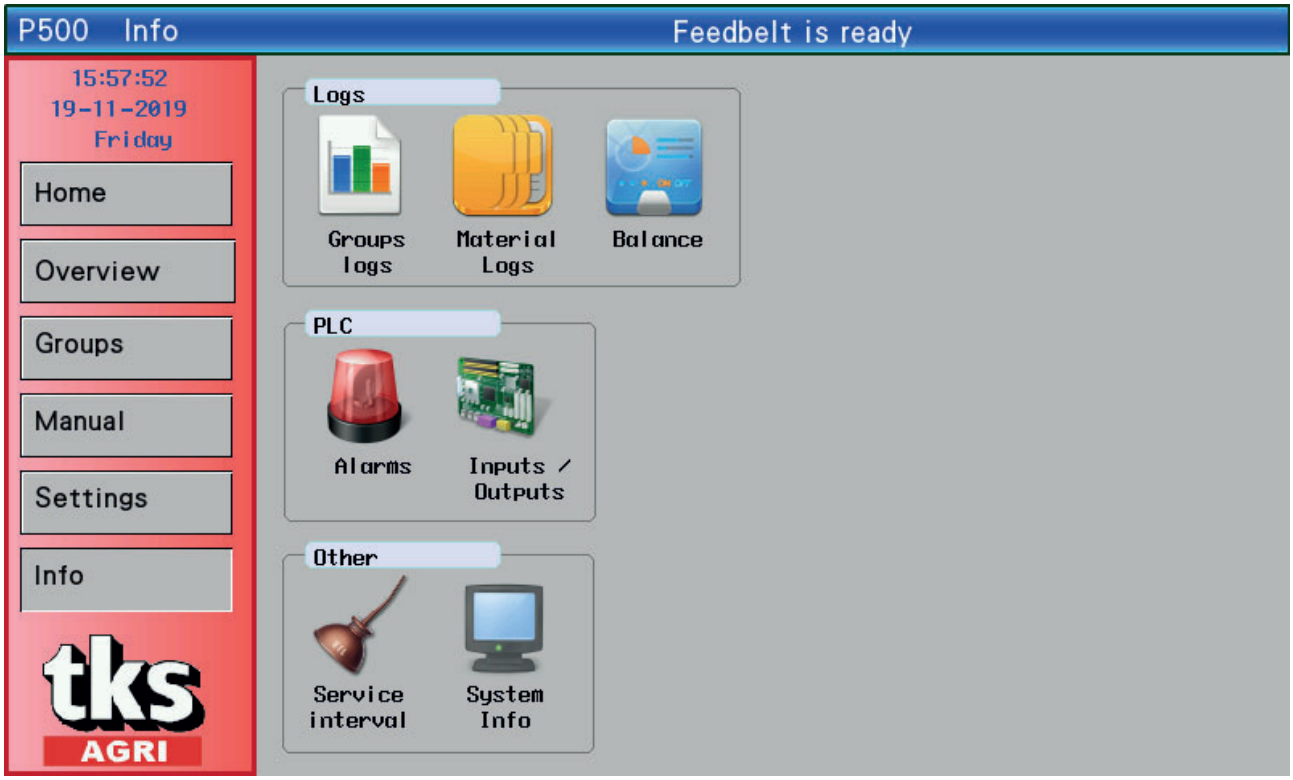

Fig. 36

Logs :
- Group log
- Filling source log
- Balance Log

PLS:
- Alarm
- In/Out data

Other:
- **Maintenance**
- **System Info**

See Fig. 36

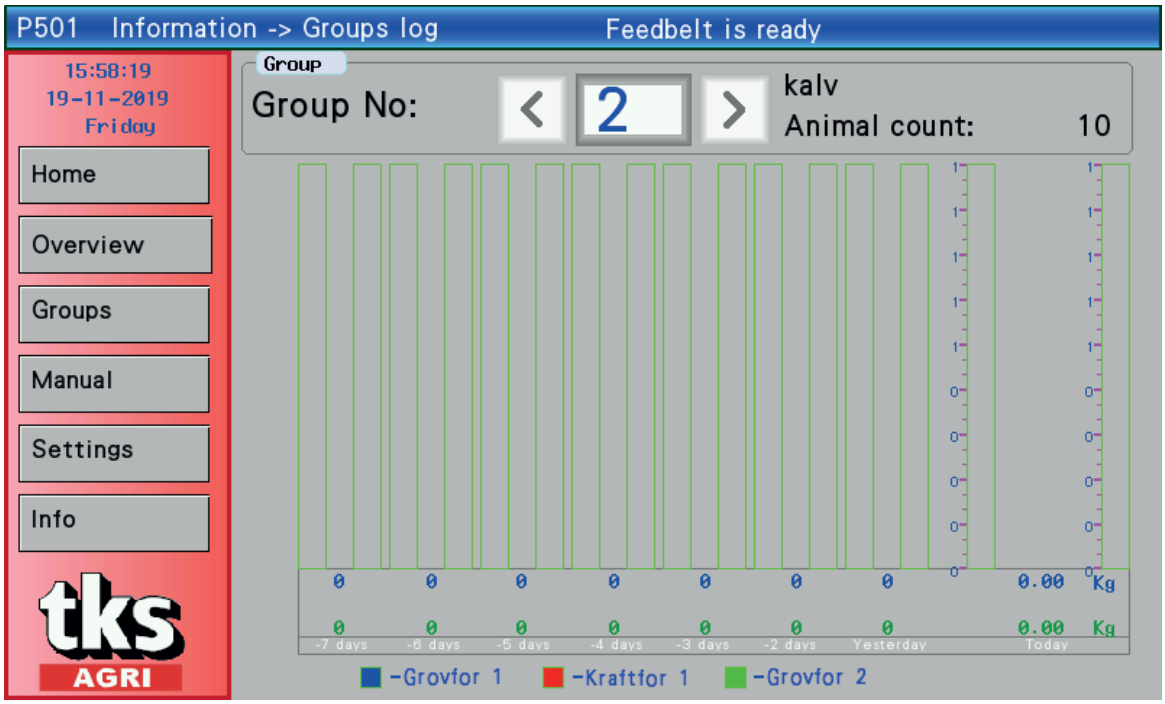

Fig. 37

Group log

- This window shows the feeding log for the day so far on the right. On the left is the log for the previous 7 days.
- Each feed type is colour-coded.
- Use the arrow keys to change group. **See Fig. 37**

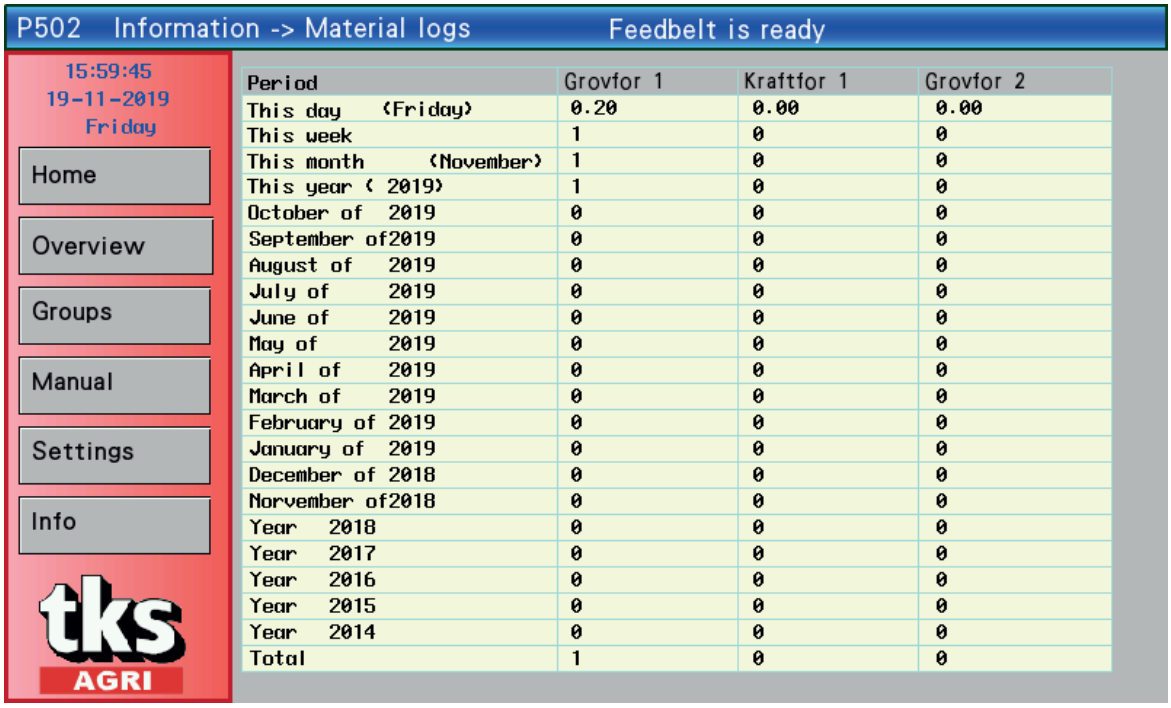

Period	Grovfor 1	Kraftfor 1	Grovfor 2
This day (Friday)	0.20	0.00	0.00
This week	1	0	0
This month (November)	1	0	0
This year (2019)	1	0	0
October of 2019	0	0	0
September of2019	0	0	0
August of 2019	0	0	0
July of 2019	0	0	0
June of 2019	0	0	0
May of 2019	0	0	0
April of 2019	0	0	0
March of 2019	0	0	0
February of 2019	0	0	0
January of 2019	0	0	0
December of 2018	0	0	0
Norvember of2018	0	0	0
Year 2018	0	0	0
Year 2017	0	0	0
Year 2016	0	0	0
Year 2015	0	0	0
Year 2014	0	0	0
Total	1	0	0

Fig. 38

Filling source log

- The window shows the total feed consumption in various intervals. **See Fig. 38**

Fig. 39

- FeedBelt performs logging when balance logging is enabled in the settings.
- **Balance –** this is where the amount of feed over and above the set amount is logged.
- The difference in balance is indicated in kg and %; it is logged from the last reset.
- If a filling source cannot deliver feed, the balance will compute the total feed that was not fed. This is shown as a negative difference in kg. This also applies when feeding is time-controlled.
- The **Feed Difference** button opens the window for manual feeding. This is where the values for a negative difference are entered. This can be dispensed or modified prior to feeding.
- The balance difference can be reset – **Press Reset.** A reset is performed automatically when the power is disconnected or when **AUTO** is turned off.
- **Automatic balancing –** When this is active, you can read off by how much FeedBelt is adjusting the feed amount.

See Fig. 39

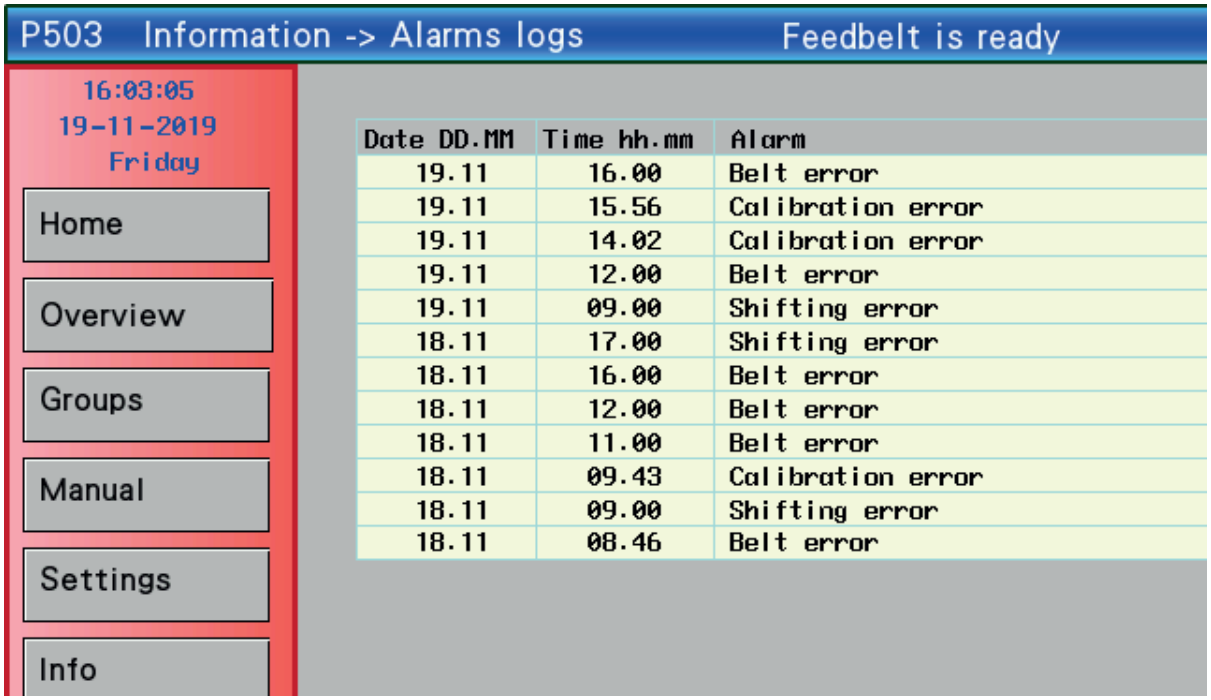

Fig. 40

Alarm

Screenshot shows the last 12 error messages. **See Fig. 40**

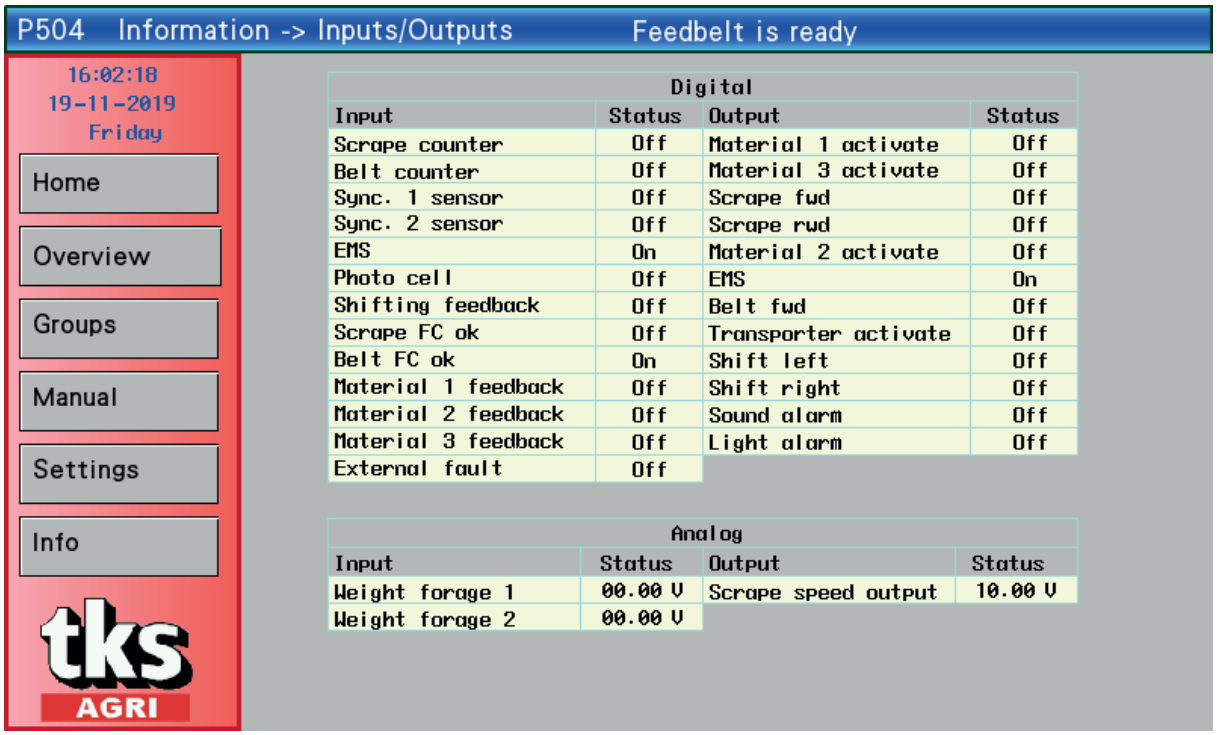

Fig. 41

In/Out data

- Screenshot shows in / outputs of the PLC

See Fig. 41

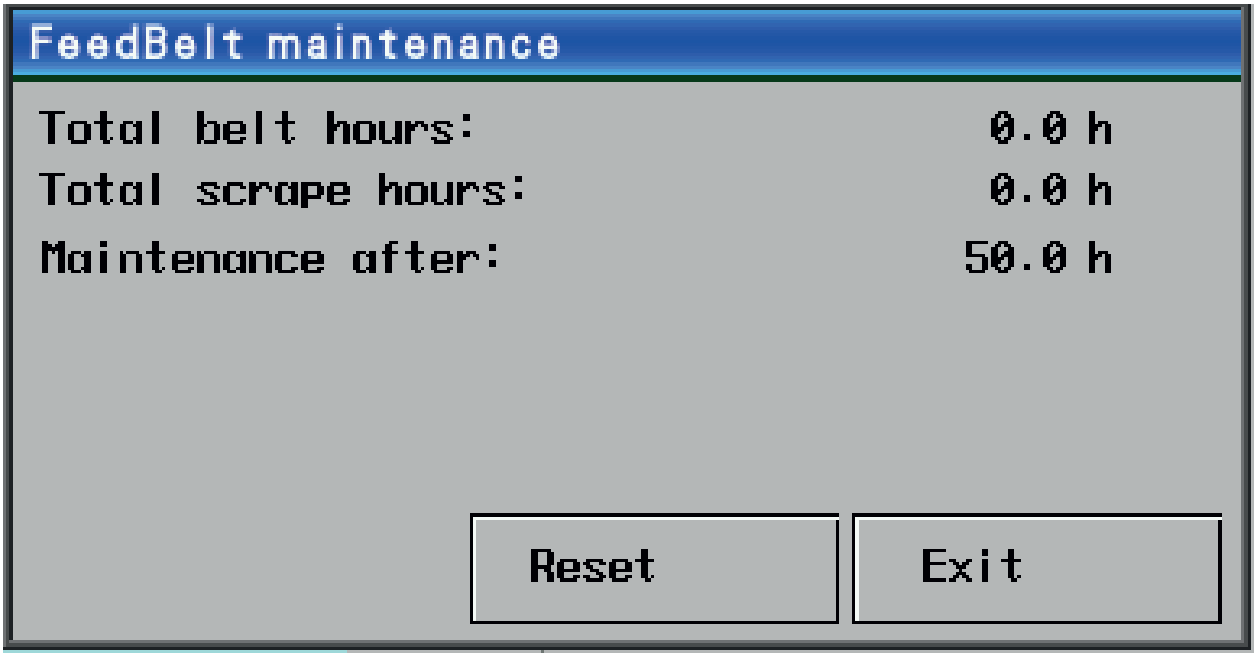

Fig. 42

Service

- Total belt time. Shows the operating time of the belt.
- Total scraper time. Shows the operating time of the scraper.
- Service after: Shows the operating time to the next service in hours. FeedBelt has service intervals of 50 hours. After a service, the counter is reset by pressing **Reset.**
- When there is less than 1 hour to a service, this window will be displayed while FeedBelt is running.
- Press **Exit** to close the window.

See Fig. 42

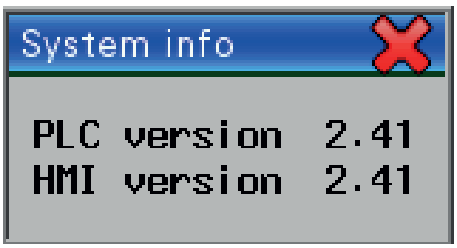

Fig. 43

System Info

- Displays program version for PLS.
- Displays program version for HMI (screen).
- Window closes with cross **X.**

See Fig. 43

4 Example of group adjustment

TKS recommends one feeding group for milk cows and one group for each pen otherwise.
The example below shows the set-up for two groups of animals of difference sizes.
The cows are fed 10 times a day with 30 kg per animal per day.
The bulls are fed twice a day with 20 kg per animal per day.
See Fig. 44 for placement of animals.

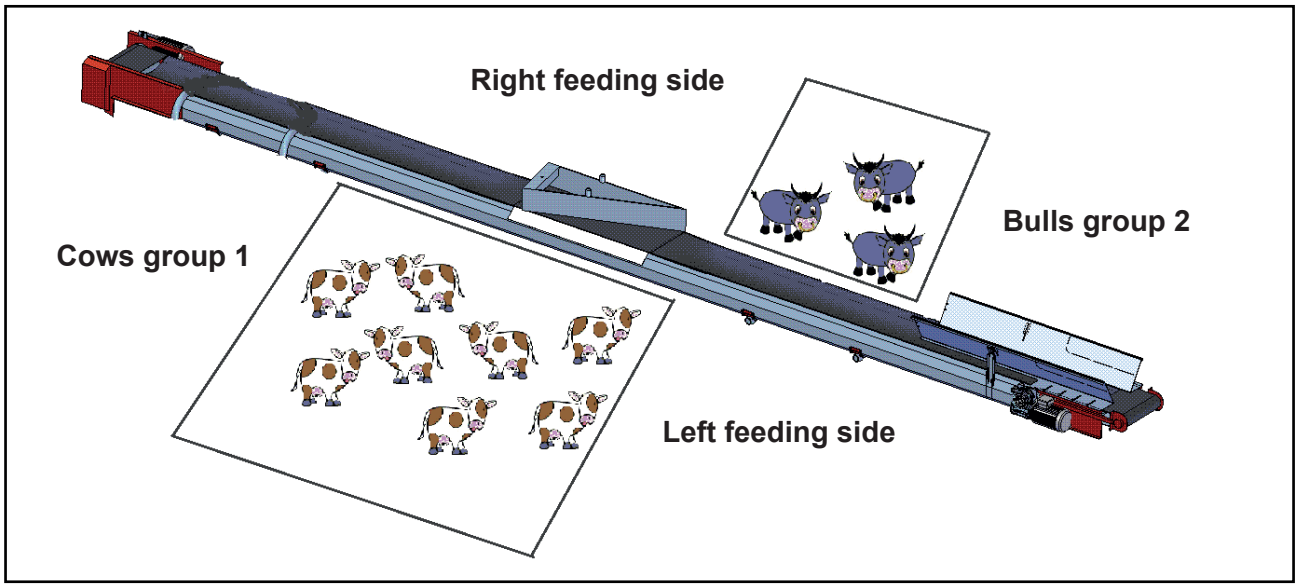

Fig. 44

Fig. 45

- Go to Settings – Define groups.
- Place the cows in Group 1.
- Select Group 1 using the right arrow key.
- Enter **"Cows"** and press Enter.
- Move the scraper to the position where the cow field starts.
- Press and hold the black button for 3 seconds to save the Start position.
- Move the scraper to the position where the cow field ends.
- Press and hold the black button for 3 seconds to save the End position.
- Select feeding side Left.

- Place the bulls in Group 2.
- Select Group 2 using the right arrow key.
- Press the white field to the right for Name. Enter **"Bulls"** and press **Enter.**
- Press the scraper control button. Move the scraper to the position where the bull field starts.
- Press and hold the black button for 3 seconds to save the Start position.
- Move the scraper to the position where the bull field ends.
- Press and hold the black button for 3 seconds to save the End position.

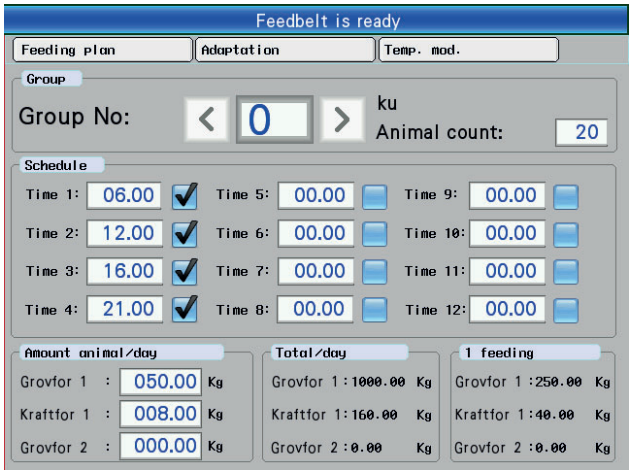

Fig. 46

- Select feeding side Right. **See Fig. 45**
- Go to Groups in the menu.
- Select group no. 1 **“Cows”**
- Press the white field to the right for Animal count. Enter 8 cows.
- Check the boxes for 10 times.
- Press the white field and insert the desired start time for these 10 times.
- Enter 30 kg Silo

- Select group no. 2 “Bulls”
- Press the white field to the right for Animal count. Enter 3 Bulls
- Check the boxes for 2 times.
- Press the white field and insert the desired start time for these 10 times.
- Enter 20 kg Silo

See Fig. 46

- Press Overview in the menu to make sure the settings are correct.

5 Maintenance and care

5.1 Important before maintenance

NB! Always pull out the plug prior to inspection, maintenance or repair of FeedBelt

- Familiarise yourself with the maintenance schedule that accompanies this manual.
- Post the maintenance schedule in a clearly visible place.
- **Important!** Create good procedures for inspections, both daily and weekly.
- Adapt the maintenance to match particularly challenging conditions, such as high temperatures, extremely low temperatures and severe temperature fluctuations.

5.2 Commissioning and inspections

For the first 14 days be attentive to the following:

- Make sure that the belt does not skew.
- Make sure that the wire runs straight on the pulleys.
- Make sure that the scrapers are properly adjusted.
- Make sure that the scraper does not hit the channel joints.

NB! If this occurs, the machine must be stopped and adjusted immediately.

Use the attached inspection form to inspect the machine on a regular basis.

5.3 Weekly inspections

- The machine must be kept clean
- Rectify any defects or faults

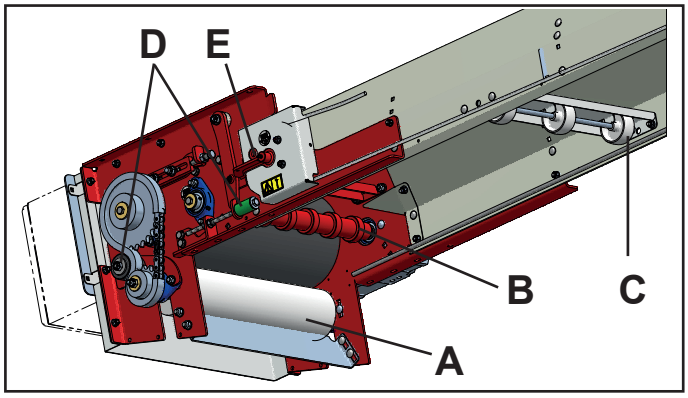

- Clean brush **(A)**
- Clean counter-roller **(B)**
- Clean rollers **(C)**
- Check tension of wire and chain **(D)**
- Lubricate bearing – 7 points **(E)**

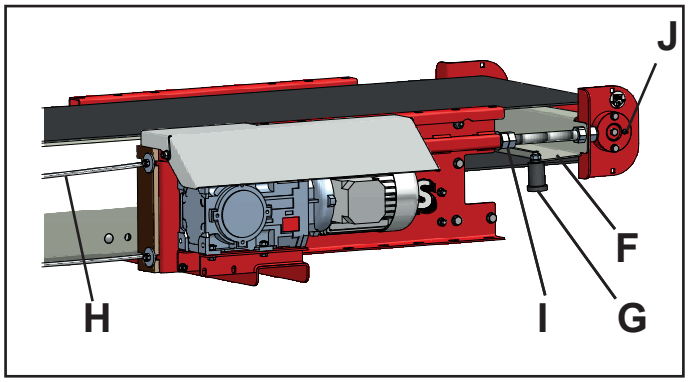

- Clean scraper **(F)**
- Clean pulleys **(G)**
- Clean wire and check for wear, damage and rust **(H)**
- Check tension of the belt **(I)**
- Lubricate bearing – 2 points **(J)**

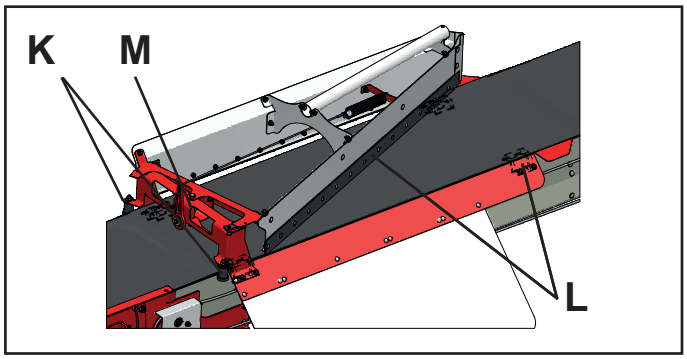

- Clean pulleys and check for wear **(K)**
- Check for wear on plastic components **(L)**
- Lubricate bearing – 1 point **(M)**

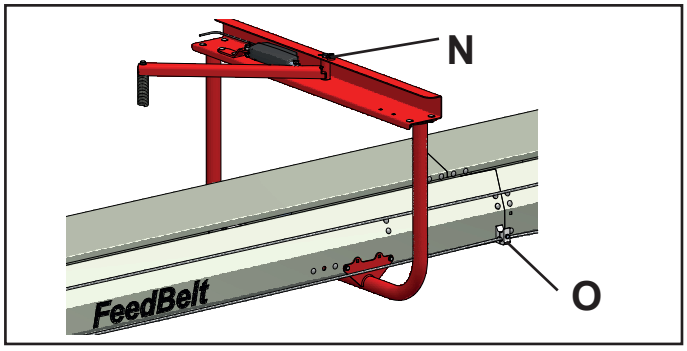

- Lubricate reversing lever – 1 point **(N)**
- Check for wear on plastic components **(O)**

5.4 Lubrication

	Component / location	Action	Operating
1	Grease nipple - bearing, brush	Lubrication	10 h
2	Grease nipple - bearing, drive drum	Lubrication	10 h
3	Grease nipple - bearing, counter roller	Lubrication	10 h
4	Grease nipple - wire pulley	Lubrication	10 h
5	Grease nipple - bearing, counter roller	Lubrication	10 h
6	Grease nipple - bearing, brush	Lubrication	10 h
7	Grease nipple - bearing, drive drum	Lubrication	10 h
8	Grease nipple - bearing, return roller	Lubrication	10 h
9	Grease nipple - bearing, return roller	Lubrication	10 h
10	Grease nipple - reversing lever	Lubrication	20 h
11	Grease nipple - scraper	Grease	20 h

Recommended grease: Q8 Ruysdael WR2

Drive end

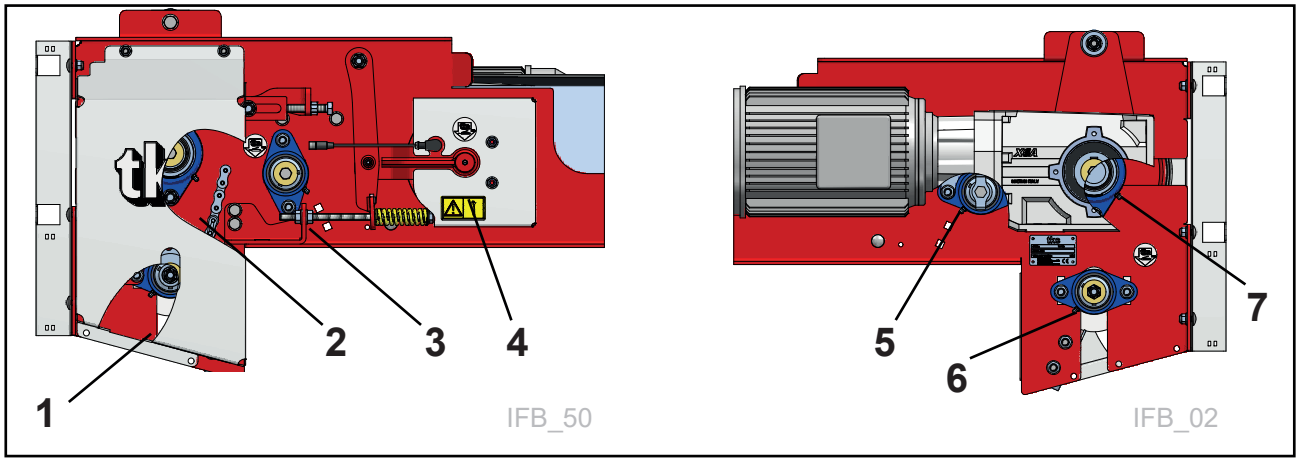

Return end

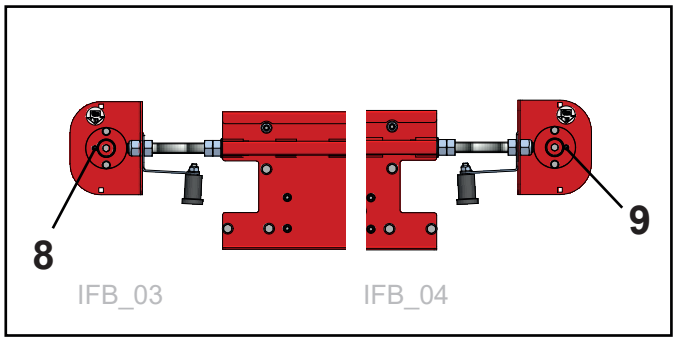

Reversing lever

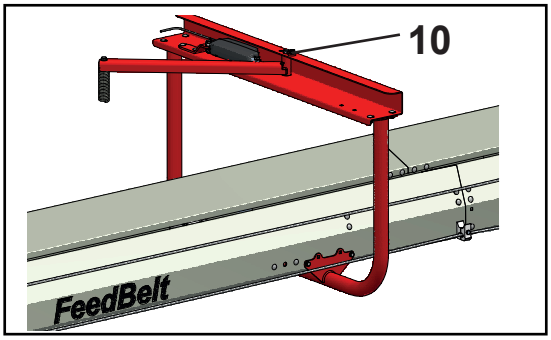

Scraper

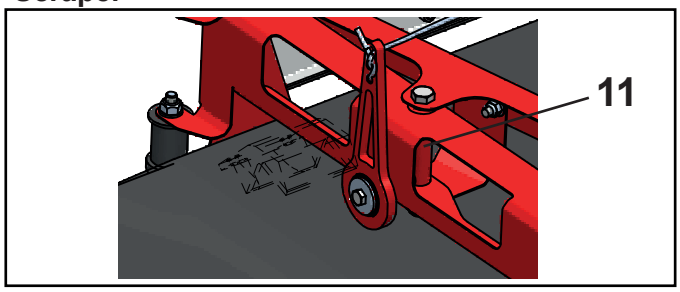

5.5 Gearbox

The gearboxes are lubricated for life, and should not during normal operation, require an oil change during the lifetime of the gearbox.

5.6 Wire maintenance

Return end

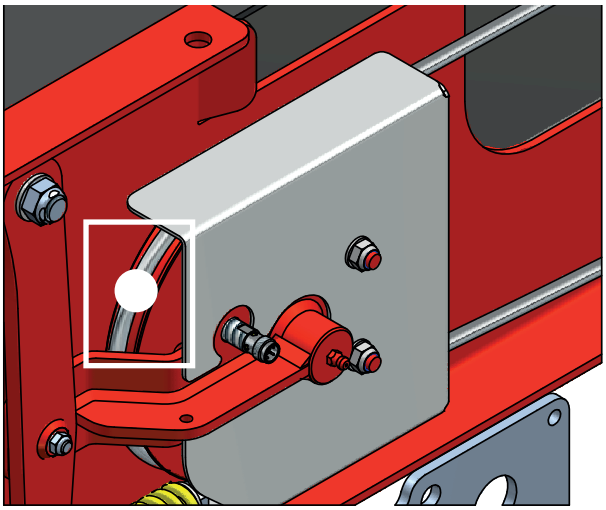

Fig. 46a

Drive end

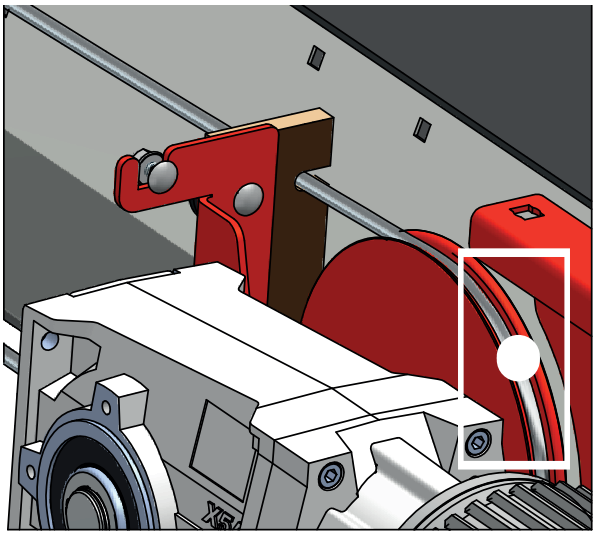

Fig. 46b

NB!

- The wire must be inspected every week.
- A dirty wire must be cleaned.
- Rust formation must be dealt wit immediately.
- Spray the wire with oil from an aerosol can. TKS No. 923054
- The wire must be lubricated at least once a year with wire oil.
- If condensation occurs, be additionally attentive to any rust formation.
- Take extra care with inspections when feeding with wet silage.
- It is important to spray where the wire runs round a bend, to ensure the oil penetrates the core of the wire.
- Spray oil on the wire at the indicated point while the wire is moving.
  See Fig. 46a and 46b
- Be careful – Risk of crush injury between wire and pulley.

5.7 Belt tensioning

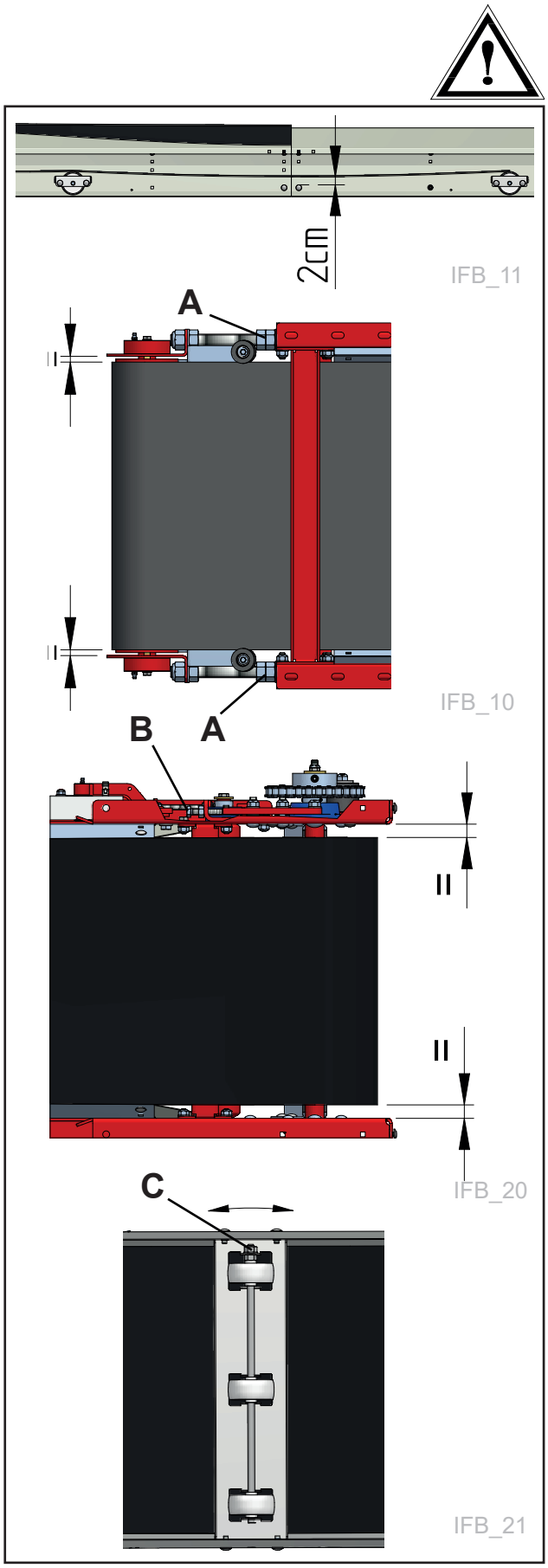

Fig. 47

NB!
Check whether the belt needs tensioning.
It is important that the belt is fully tensioned and adjusted.

Tensioning
- The belt should be approx. 2 cm from the screws in the middle of the joint sections.
- The belt is tensioned using the nut **(A)** **see Fig. 47**
- Run the belt without feed to check the tensioning.

Tracking
Adjust the tracking of the belt so that the belt is equally spaced with respect to the side plates.
- On the return section, adjust the nut **(A)** on one side only. The belt must run without touching the pulleys. **See Fig. 47**
- Adjust the drive roller on the drive section using screw **(B)**. The bearing nuts must be loosened during adjustment. Re-tension after completing the adjustment.
- Run the belt without feed to check the tracking.

Tracking along the channel
Adjust belt tracking along the channel if the belt touches the side member.
- Adjust the shaft angle using nut **(C)** on the return rollers.
- Adjust a little at a time and test run.
- Adjust on more of the shafts if necessary.

5.8 Wire tensioning

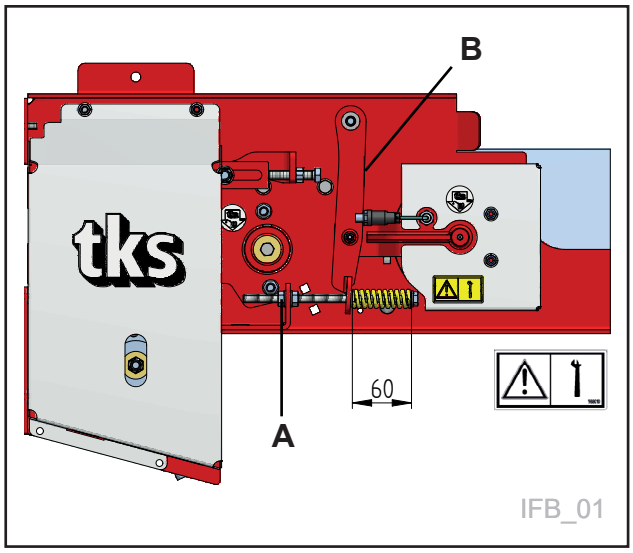

Fig. 48

NB!
The wire could begin to slip if it is not taut. This can cause wear on the drive pulleys.

- Tighten the screw **(A)** so that the length of the spring is 60 mm. **See Fig. 48**
- The length of the wire must be such that when the spring is tensioned to 60 mm, the lever **(B)** points straight down.

5.9 Scrape reverser adjustment

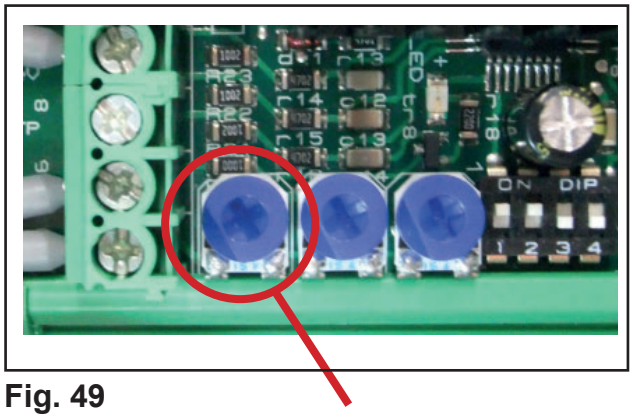

Fig. 49

- The actuator for the scrape reverser must have the correct force for the scraper to be correctly reversed.
- Too little force will prevent the scraper from fully reversing.
- Too much force will make the spring jump over the top pipe. This will cause unnecessary wear.
- The adjustment is performed on adjuster screw number 1 on the card for the actuator controller inside the control cabinet. **See Fig. 49**
- Adjust the force down by turning anticlockwise.
- Adjust the force up by turning clockwise.
- Adjust in small steps.
- Turn the adjuster screw 1/4 turn and perform an automatic reversal. Menu Manual.

NB! If the function stops working, the reversing lever may also be jammed.
Lubricate well. **See Chapter 5.4 item 10**

5.10 Tightening torque for screws and bolts:

M6	11 Nm
M8	27 Nm
M10	53 Nm
M12	91 Nm
M16	222 Nm
M20	434 Nm
M24	750 Nm

5.11 Cleaning the FeedBelt

NB!
TKS recommends using compressed air when cleaning.

NB!
TKS does not recommend the use of high-pressure washers when cleaning. Any high-pressure washing must be performed with care; never direct the water onto the bearings in the drive and return ends.

- After washing/cleaning, it is important for all bearings to be greased.
- Lubricate FeedBelt as per the lubrication schedule.
- Run the system for a few minutes so that the grease is distributed into the bearings.
- Check the belt, bearings and guards for damage.
- Repair any paint damage.
- Spray wire with oil.
- Use wire oil from an aerosol can, TKS no. 923054

5.12 Fault symptoms on the wire

“Bird-nesting”/curve deformation is a result of an imbalance between the inner and outer threads on the wire. A new wire **must** be installed.	
If any cracks appear in the outer threads, a new wire **must** be installed!	
NB: If rust is present, the following must be performed: • Lubricate the wire with wire oil • Monitor the damage with frequent inspections, and lubricate as necessary	

6 Alarms and trouble shooting

When error messages are displayed, the screen will always have the light on and the light will flash every 10 seconds.

Screens	Possible causes	Corrective actions
Error 01: **EMS!**  	• *Emergency stop button was pressed.* • *Faulty connection between slave and master cabinets*	• *Check emergency stop buttons on master and slave cabinets.* *If they are pressed in, release them. Turn the button anticlockwise.* • *If both buttons are released, check connection between master and slave cabinets. See circuit diagram.*
Error 02: **Scrape error!**  	• *Wire pull for the scraper is damaged or the wire is slipping.* • *The scraper sensor is disconnected or damaged.* • *Faulty connection between slave and master cabinets*	• *Check that there is no damage to the scraper, wire or wire pull.* • *Tighten the wire.* ***See Fig. 48*** • *Check scrape's sensor and it's connection.* • *Check connection between master and slave cabinets*
Error03: **Belt error!**  	• *Belt is mechanically damaged* • *Belt sensor is disconnected or damaged* • *Faulty connection between slave and master cabinets*	• *Check if there is no damage on the belt* • *Check belt sensor and sensor wire* • *Check connection between master and slave cabinets* • *Tighten the belt.* ***See Fig. 47***
Error 04: **Fault** **on synchronisation sensor**  	• *Both synchronisation sensors were enabled at the same time.* • *The sensors are disconnected or damaged.* • *No signal from the scraper.*	• *Check sensor and sensor cables.* • *Check the connection between the master and slave cabinet.* • *Check the gap between the scraper and sensors, max. 20 mm.*
Error 05: **No feed on belt!**  	• *No feed entering the belt.* • *Photocell is incorrectly adjusted or faulty.* • *Photocell is enabled but not connected.* • *Photocell max. time is too short.*	• *Check that the filling source is OK.* • *Adjust the photocell direction and adjust the gap between the feed and photocell.* • *Disable the photocell in the settings.* • *Adjust the maximum time of the photocell upwards.* • *Check if the photocell is faulty.*

Screens	Possible causes	Corrective actions
Error 06: **Reversal failed!** 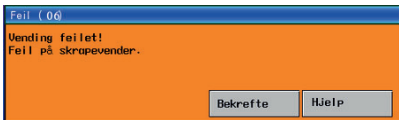	• *The scraper reverser has broken.* • *Fault on reverser actuator or cable.* • *No scraper reverser is fitted.* • *The control unit for the reverser actuator is incorrectly adjusted.* • *The time limit of 15 seconds for reversal has*	• *Check the scraper reverser and lubricate if necessary.* • *Check the reverser actuator and cable.* • *Ignore this message if there is no scraper reverser.* • *Adjust the control unit for* • *the reverser actuator.* ***See Fig. 44***
Error 07: **Fault on the scraper's frequency converter!** 	• *Fault on the scraper's frequency converter.*	• *Press **Reset FC.*** • *The frequency converter will restart automatically.* • *Check the wire pull motor.* • *Check the power supply to the master and slave cabinets.*
Error 08: **Fault on the belt's frequency converter!** 	• *Fault on the belt's frequency converter.*	• *Press Reset FC.* *The frequency converter will restart automatically.* • *Check the belt motor.* • *Check the power supply to the master and slave cabinets.*
Error 09: **Fault on filling source 1!** **Forage 1** 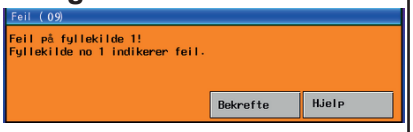	• *Fault signal from filling source 1.*	• *Check filling source 1.*
Error 10: **Fault on filling source 2!** **Consentrate 1** 	• *No signal from filling source.* • *The filling source is not installed but is enabled in the settings.*	• *Check if the filling source is empty.* • *Check the power supply to the filling source.* • *Check the sensors for the filling source.* • *Check the motor at the filling source.* • *Check the cables to the filling source.* • *Disable the filling source in the settings.*
Error 11: **Fault on filling source 3! Forage 2** 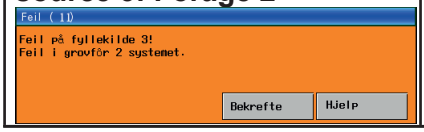	• *Fault signal from filling source 3.*	• *Check filling source 3.*

Screens	Possible causes	Corrective actions
Error 12: **Fault on filling source 3!** **Consentrate 2** 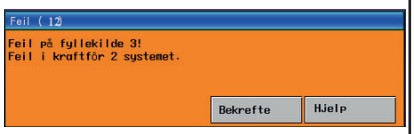	• *No signal from filling source.* • *The filling source is not installed but is enabled in the settings.*	• *Check if the filling source is empty.* • *Check the power supply to the filling source.* • *Check the sensors for the filling source.* • *Check the motor at the filling source.* • *Check the cables to the filling source.* • *Disable the filling source in the settings.*
Error 13: **External error!** 	• *External alarm signal*	• *Check the alarms for connected equipment.* • *Overfill protection may be present on a conveyor belt.*
Error 14: **Fault on filling source 1!** **Forage 1** 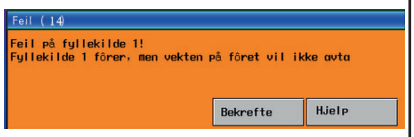	• *The filling source feeds but there is no reduction in weight.* • *Weight setting! = 0* • *kg per 100 p = 0.*	• *Check that the filling source is OK.* • *Check the weight system.* • *Calibrate the weight in the settings.* • *Run for 10 seconds and enter the weight.*
Error 15: **Fault on filling source 2!** **Consentrate 1** 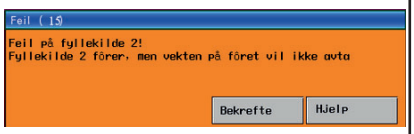	• *The filling source feeds but there is no reduction in weight.* • *Weight setting = 0* • *kg per 100 p = 0.*	• *Check that the filling source is OK.* • *Check the weight system.* • *Calibrate the weight in the settings.* • *Run for 100 p and enter the weight.*
Error 16 : **Fault on filling source 3!** **Forage 2 / Consentrate 2** 	• *The filling source feeds but there is no reduction in weight.* • *Vekt innstilling = 0* • *Kg pr. 10 sek = 0* *eller* • *Kg pr. 100p = 0*	• *Check that the filling source is OK.* • *Check the weight system.* • *Calibrate the weight in the settings.* • *Run for 10 seconds and enter the weight, or* • *Run for 100 p and enter the weight.*
Error 17 : **Calibration error!** 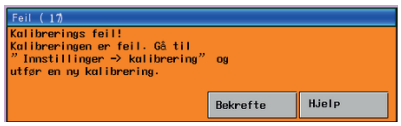	• *Calibration is incorrect* • *It is not calibrated* • *It is calibrated but still incorrect*	• *Perform a new calibration; see separate chapter.* • *Calibration must be performed in the correct sequence.* • *Press **Execute** when finished.*

Notes

TKS is a family owned company
with a strong brand name.
We are providing our customers with a
unique and complete range of high
quality products.

www.tks-as.no

TKS Agri AS,
Kvernelandsvegen 100
N-4355 Kvernaland
Norway

e-post : post@tks-as.no
Phone +47 51 77 05 00